Serial number: _____



Translation of the original operating instruction



Aerial Access Platform





LEO 27 GT plus

©2025 TEUPEN GmbH

213393-B_en_GB LEO27GTplus (HAB) BA

Manufacturer:
TEUPEN Maschinenbau GmbH
Marie-Curie-Straße 13
48599 Gronau, Germany
☎: +49 (0) 2562 8161-0
🖷: +49 (0) 2562 8161-888
✉: info@teupen.com
🌍: www.teupen.com

Service:
☎: +49 (0) 2562 8161-300
✉: service@teupen.com

© TEUPEN Maschinenbau GmbH 2025

Table of contents

1 General 7
1.1 Information about these instructions 7
1.2 Explanation of symbols 7
1.3 General explanation of symbols 9
1.4 Limitation of liability 10
1.5 Copyright 11
1.6 Warranty conditions 11
1.7 Notes regarding the warranty card 12
1.8 Product trainings 12

2 Safety 13
2.1 Basic hazards 13
2.1.1 General dangers in the workplace 13
2.1.2 Danger of electric shock 14
2.1.3 Dangers caused by mechanical elements 17
2.1.4 Hazards due to hydraulic energies 18
2.1.5 Hazards due to high temperatures 18
2.1.6 Hazards due to chemical substances 19
2.1.7 Hazards due to expelled gases 20
2.1.8 Dangers due to collisions 20
2.1.9 Dangers caused by modifications to the machine 21
2.2 Proper use 22
2.3 Responsibility of the owner 23
2.4 Personnel requirements 24
2.4.1 Qualifications 24
2.4.2 Unauthorised personnel 25
2.4.3 Training 25
2.5 Personal protective equipment 26
2.6 Position of the safety device 27
2.7 Description of the safety devices 29
2.8 Symbols on the machine 32
2.9 Behaviour in case of fire and accidents 33
2.10 Environmental protection 34
2.11 IT vulnerabilities 35

3 Technical data 37
3.1 Dimensions 37
3.2 Work diagram of aerial access platform 38
3.3 Performance 38
3.4 Weights and loads 39
3.5 Drives 39
3.5.1 Combustion engine 39
3.5.2 Electric motor 40
3.5.3 Electric auxiliary drive 40
3.6 Emissions 41
3.7 Operating conditions 41
3.8 Consumables 42

3.9 Filling quantities ... 44
3.10 Type plate ... 45

4 Construction and function ... 47
4.1 Overview ... 47
4.2 Brief description ... 48
4.3 Assembly description ... 50
4.3.1 Crawler chassis ... 50
4.3.2 Bracings ... 50
4.3.3 Boom system ... 51
4.3.4 Working basket ... 51
4.3.5 Combustion engine ... 51
4.3.6 Battery drive ... 52
4.3.7 Electric motor ... 52
4.4 Operating elements and displays ... 53
4.4.1 Control panel and radio remote control ... 53
4.4.2 Control panels on the control box ... 57
4.4.3 Emergency control ... 58
4.5 Electrical connections ... 59
4.5.1 Feed ... 59
4.5.2 Sockets in platform ... 60
4.6 Work areas and danger zones ... 60
4.7 Description of the workstation ... 61
4.8 Accessories ... 62
4.8.1 Accessories (optional) ... 62

5 Transportation and storage ... 65
5.1 Safety instructions for transportation ... 65
5.2 Inspection on receipt of delivery ... 65
5.3 Attachment points ... 65
5.4 Storage ... 67

6 Operation ... 69
6.1 Safety instructions for operation ... 69
6.2 Switching the machine on/off ... 69
6.2.1 Connecting the machine to the mains supply ... 69
6.2.2 Switching the machine on/off (combustion engine) ... 70
6.2.3 Switching the machine on/off (mains power) ... 72
6.3 Shutting down in case of emergency ... 73
6.4 Principles of the graphic display screen ... 73
6.4.1 Overview ... 73
6.4.2 Examples of operating modes ... 77
6.4.3 Main menu ... 79
6.4.4 Special menu ... 84
6.4.5 Additional machine status information ... 85
6.5 Moving the machine ... 89
6.5.1 Moving the machine using radio remote control ... 91
6.5.2 Driving the machine along a slope ... 93
6.5.3 Driving the machine up inclines ... 95
6.6 Crawler chassis, height- and width-adjustable ... 95
6.6.1 Hydraulic crawler adjustment ... 95
6.6.2 Tips and recommendations for adjusting the crawler chassis hydraulically ... 97
6.7 Removing/mounting the working basket ... 97

Table of contents

6.7.1 Removing the working basket ... 98
6.7.2 Installing the working basket ... 99
6.8 Operating the bracing ... 101
6.8.1 Moving the bracing into the work position ... 102
6.8.2 Manual bracing ... 105
6.8.3 Automatic bracing ... 107
6.9 Operating the boom system ... 108
6.9.1 Operating the platform assembly ... 108
6.9.2 Moving the boom system automatically into working position ... 112
6.10 Moving the boom system into transport position ... 113
6.10.1 Definition of transport position ... 113
6.11 Bringing the bracings into the transport position ... 115
6.11.1 Moving the bracing into the transport position manually ... 115
6.11.2 Moving the bracing automatically into the transport position ... 116
6.12 Filling the fuel tank ... 117
6.13 Secondary control ... 118
6.13.1 Activating the secondary control ... 119
6.13.2 Overriding with the platform control ... 122
6.14 Emergency operation ... 123
6.14.1 Operating the boom function in emergency operation ... 123
6.14.2 Raising and lowering the outriggers in emergency operation ... 127
6.14.3 Moving the machine in emergency operation ... 130
6.15 Service mode ... 132
6.15.1 Switching the machine on/off for service mode ... 133
6.15.2 Boom system in service mode ... 135
6.15.3 Raising and lowering the outriggers in service mode ... 138
6.15.4 Moving the machine in service mode ... 141
6.16 12-V auxiliary drive ... 144
6.17 Changing/charging the remote control’s batteries ... 145
6.18 Jump-starting ... 146
6.19 Locks ... 147
6.19.1 Resetting the combination on the shackle lock ... 147

7 Maintenance ... 149

7.1 Safety instructions for maintenance ... 149
7.2 Maintenance work ... 152
7.2.1 Cleaning the machine ... 152
7.2.2 Tensioning the track ... 153
7.2.3 Hydraulic system ... 155
7.2.4 Replacing the hydraulic filters ... 156
7.2.5 Checking the gearbox oil for the crawler chassis ... 158
7.2.6 Lubricating the transports ... 160
7.2.7 Working basket ... 163
7.2.8 Lubricating the rotating assembly ... 164
7.2.9 Rotating assembly tightening torques ... 165
7.2.10 Winter operation ... 166
7.2.11 Drive units – Overview ... 166
7.2.12 Overview of diesel engine ... 167
7.2.13 Lubricating the machine ... 167
7.3 General maintenance schedule ... 168

8 Faults ... 171

8.1 Safety instructions for fault clearance ... 171
8.2 Fault table ... 176

8.3 Fuse assignment ... 179
8.4 Notes about the crawler track ... 180
8.5 Information messages ... 180

9 Disposal ... 181

10 Appendix ... 183
10.1 Circuit diagram ... 184
10.2 Hydraulics diagram ... 186
10.3 Adhesive label folder ... 188
10.4 Drive units ... 190
10.4.1 Combustion engine (diesel) ... 190
10.4.2 Combustion engine (petrol) ... 233
10.5 Accessories documentation ... 235
10.5.1 Handrail guard on the platform ... 235
10.5.2 TEUPEN operator protection system ... 235
10.5.3 Monitoring of the platform ladder ... 236
10.5.4 Flashing lights on the platform ... 237
10.5.5 Strobe lights under the platform ... 237
10.5.6 Flashing lights on outriggers ... 238
10.5.7 Flashing lights on the turntable ... 238
10.5.8 GRP platform ... 239

1 General

1.1 Information about these instructions

These instructions enable safe and efficient handling of the aerial access platform/ crawler crane (also referred to below as the “machine”). The instructions are an integral part of the machine, and must be kept in its immediate vicinity and remain accessible to the personnel at all times.

The trained personnel is required to have carefully read and understood these instructions prior to beginning any work. In addition to these instructions, also observe the supplier documentation included in the appendix. Working safely always requires that the safety instructions, step-by-step instructions and notes contained in these instructions are followed at all times.

In addition, observe the local accident prevention regulations and general safety instructions applicable at the machine’s deployment site.

Illustrations in these instructions are intended to convey a general understanding, and may differ from the actual equipment.

1.2 Explanation of symbols

Safety instructions

These instructions indicate safety instructions using symbols. The safety instructions begin with a signal word that indicates the extent of the respective risk.

⚠ DANGER

This combination of symbol and signal word indicates an immediate hazard that will result in death or serious injury if not averted.

⚠ WARNING

This combination of symbol and signal word indicates a potential hazard that may result in death or serious injury if not averted.

CAUTION

This combination of symbol and signal word indicates a potential hazard that may result in slight or minor injury if not averted.

CAUTION

This combination of symbol and signal word indicates a potential hazard that may result in damage to property or the environment if not averted.

Environmental protection

This combination of symbol and signal word indicates a potential environmental hazard.

Tips and recommendations

NOTICE

This combination of symbol and signal word indicates useful information and recommendations that assist in using the machine efficiently and in avoiding faults.

Specific notes on safety

The following symbols are used in the safety information in order to highlight specific dangers:

DANGER

This combination of symbol and signal word indicates hazards resulting from electrical current. Failure to observe the safety instructions may cause serious or fatal injury.

Pictograms in these instructions

These instructions use the following pictograms and highlighting to indicate step-by-step instructions, the results of actions, lists, references and other elements:

Pictogram	Explanation
1.	Step-by-step instructions (numbered)
-	Results of work steps
	References to chapters in these instructions and associated documents
■	Indicates listings and bullet points without a defined order.
[button]	Operating elements (e.g. buttons, switches), indicator elements (e.g. telltale lamps)

1.3 General explanation of symbols

Safety instructions

	This warning symbol stands for danger of electrical shock		This warning symbol warns of injuries due to crushing of limbs
	This warning symbol stands for danger due to hot surfaces		

Prohibition signs

	High-pressure cleaners prohibited		Do not stand in the working basket during travel
	Working with the aerial lift prohibited for persons under the age of 18		Observe the swivel range of the machine
	Work on live parts prohibited		Beware of lateral forces
	Do not lift loads at an angle		Observe the wind speed
	Do not climb onto the safety fence around the working basket		

Mandatory instruction signs

	Wear foot protection		Use a welding mask
	Wear protective clothing		Earth before use
	Wear hand protection		Wear hearing protection
	Use a safety harness		Wash hands
	Wear eye protection		Use skin protection products
	Wear head protection		Unplug the mains plug
	Wear breathing protection		Follow the user instructions
	Wear face protection		Wear high-visibility jacket

1.4 Limitation of liability

All the specifications and instructions included in these operating instructions have been compiled in accordance with the applicable standards and regulations, the latest technological advances, and our many years of knowledge and experience.

The manufacturer assumes no liability for damage incurred due to:

- Failure to observe these instructions
- Improper use
- Deployment of untrained personnel
- Improper assembly, commissioning, operation and maintenance of the machine
- Operation of the machine with defective or improperly attached safety equipment, or non-functioning safety and protective equipment
- Unauthorised modifications
- Technical modifications
- Inadequate monitoring of machine components that are subject to wear
- Improperly performed repairs
- Use of spare parts other than those approved by the manufacturer
- Unauthorised modifications to component software
- Disasters caused by foreign bodies or acts of God

For special designs, when using additional ordering options, or due to the latest technical modifications, the actual scope of supply may deviate from the explanations and depictions provided in these instructions. The obligations entered into as

part of the supply contract, the general terms and conditions and the manufacturer’s delivery conditions, and the legal provisions as applicable at the time of concluding the contract shall apply.

1.5 Copyright

The content of these instructions is subject to copyright.

Its use is permitted within the scope of machine operation. Further use (e.g. electronic instead of mechanical reproduction), including partial use and translations into other languages, is not permitted without the manufacturer’s written consent.

All rights to these instructions held by Teupen Maschinenbau GmbH.

1.6 Warranty conditions

The warranty terms are specified in the manufacturer's general terms and conditions.

1.7 Notes regarding the warranty card

To ensure warranty claims between the customer, service partner and TEUPEN can be processed as quickly as possible, it is essential that the warranty card, which is located at the front of the machine record, be filled out immediately after the machine is handed over to the owner and sent back to Teupen. If the warranty card is not filled in correctly, we will not be able to process any warranty claims as important data required for processing will not be available to us.

Please send the warranty card to:

Teupen Maschinenbau GmbH

Service Point

Marie-Curie-Straße 13

48599 Gronau, Germany

Example of correctly filled in warranty card:

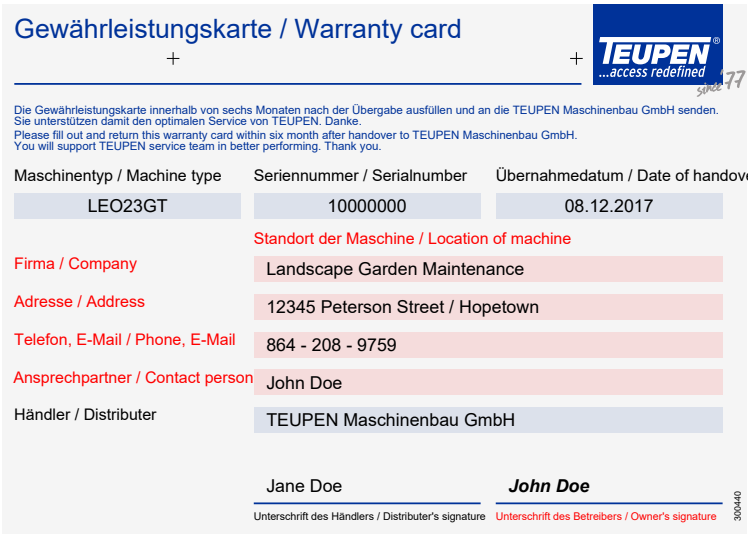

Gewährleistungskarte / Warranty card

TEUPEN ...access redefined since 1977

Die Gewährleistungskarte innerhalb von sechs Monaten nach der Übergabe ausfüllen und an die TEUPEN Maschinenbau GmbH senden. Sie unterstützen damit den optimalen Service von TEUPEN. Danke.
Please fill out and return this warranty card within six month after handover to TEUPEN Maschinenbau GmbH. You will support TEUPEN service team in better performing. Thank you.

Maschinentyp / Machine type	Seriennummer / Serialnumber	Übernahmedatum / Date of handov
LEO23GT	10000000	08.12.2017

Standort der Maschine / Location of machine

Firma / Company	Landscape Garden Maintenance
Adresse / Address	12345 Peterson Street / Hopetown
Telefon, E-Mail / Phone, E-Mail	864 - 208 - 9759
Ansprechpartner / Contact person	John Doe
Händler / Distributer	TEUPEN Maschinenbau GmbH

Jane Doe — Unterschrift des Händlers / Distributer's signature

John Doe — Unterschrift des Betreibers / Owner's signature

300440

Fig. 1

1.8 Product trainings

Besides comprehensive training on the machine, we offer a broad range of training courses in the fields of operation, maintenance and application. See contact details on page 2.

For further details, visit http://www.teupen.com.

2 Safety

This section provides an overview of all key safety aspects for protecting people and for safe and fault-free operation. Additional specific safety instructions are included in the sections detailing the individual service life phases.

2.1 Basic hazards

The following section indicates remaining risks which may arise in connection with the machine even when it is used for its proper use.

In order to reduce the risks of personal injury and material damage and to prevent hazardous situations, adhere to the safety instructions listed here and the safety instructions in the other sections of these operating instructions.

2.1.1 General dangers in the workplace

Swivelling machine

⚠ WARNING

Risk of fatal injury due to swivelling of the machine

The machine may swivel out during operation. This can cause serious or even fatal injuries.

- Never step under or into the swivel range of the machine.
- Never move the machine without supervision.
- Always operate the machine with at least two persons.
- Always wear personal protective equipment.

Work in high places

⚠ WARNING

Risk of falling

During work in high places, there is a risk of falling. This can cause severe or even fatal injuries.

- When in the working basket, always wear a safety harness (in accordance with EN 361) and do not swing or move abruptly.
- Do not climb onto the safety fence around the working basket.
- Make sure that the machine is set up properly and is positioned securely.
- When moving the working basket, make sure that there is no risk of body parts getting pinched, e.g. between the crane assembly and a wall.
- If the wind speed exceeds 12.5 m/s (wind strength 6 Bft), cease work immediately.
- Always wear personal protective equipment.

Exhaust gases

⚠ WARNING

Risk of fatal injury due to suffocation and poisoning from exhaust gases

Upon inhalation, exhaust gases can lead to suffocation, cause severe poisoning and bring about severe injuries to the respiratory tract.

- When operating the machine in diesel mode, always ensure that the work area is well-ventilated with fresh air.
- If exhaust gases are inhaled, take the affected person into an area with fresh air and call a doctor immediately.

2.1.2 Danger of electric shock

Electric power

⚠ DANGER

Risk to life due to electric current!

Upon contact with voltage-conducting parts, there is an immediate risk to life due to electric shock. Damage to the insulation or individual components can pose a risk of fatal injury.

- Do not work on or near high-voltage lines.
- Work on the electrical system must only be performed by qualified electricians.
- In case of damage to the insulation, switch off the voltage supply immediately and have the machine repaired.
- Never bypass or disable any fuses or circuit breakers. When changing fuses or circuit breakers, make sure that the ampere rating is correct.
- Keep moisture away from live parts. It may cause a short-circuit.
- Observe cable sizes according to “Cable lengths”.
- Route (extension) cable such that it cannot be run over, does not come into contact with liquids, is not severely bent or subjected to any other form of strain.
- Keep the socket easily accessible at all times.
- Before performing work on live parts, pull the mains plug.

⚠ DANGER

Upon contact with voltage-conducting parts, there is an immediate risk to life due to electric shock. Damage to the insulation or individual components can pose a risk of fatal injury!

Contact with live parts of electrical systems may have fatal consequences!

- When working in the vicinity of live parts of electrical systems, the regulations of the owner must be observed.
- If the live parts of the system cannot be de-energized and earthed, electrically insulated, covered and/or cordoned off or otherwise secured for the duration of the work in order to protect personnel, a sufficient safety distance from the live parts must be strictly maintained. Always define safety measures in consultation with the owner.
- The respective minimum distance specified must always be observed.
- If no information is provided as to which parts are live, the maximum safety distance must be maintained.
- The specified safety distances must be maintained during all movements of the machine. They apply to motion towards direct contact in all directions. They also apply to equipment, tools and workpieces. External factors such as the work platform or exposed power lines swinging upwards must be taken into account when calculating the safety distances.
- The following safety distances must be observed.

Nominal voltage up to…	Safety distance*
1 kV	1.0 m
110 kV	3.0 m
220 kV	4.0 m
380 kV	5.0 m
For unknown nominal voltage	5.0 m

* Other safety distances (safety clearances) may apply in specific countries. It is the responsibility of the machine operator to familiarise themselves with the applicable safety distances in their local area.

Batteries

⚠ WARNING

Risk of injury through improper handling of batteries!

Improper handling of batteries may cause them to explode or to leak harmful fluids. Skin contact with these fluids can cause chemical burns. Ingestion can cause severe poisoning. Eye contact can result in permanent blindness.

– Never short-circuit a battery's contacts (positive and negative terminals).
– Never use or store batteries in areas subject to potentially explosive atmospheres or where temperatures could become high.
– Never try to solder, repair, modify, convert or disassemble batteries.
– Always keep batteries out of reach of unauthorised persons.
– To prevent fire, overheating, explosion or battery fluid leaks, always protect batteries from hard impacts, high weight loads and any other harmful effects. Leaked fluid may combust.
– Avoid contact with leaked fluid.

Measures after contact with battery fluid:

- Wash skin that has come into contact with battery fluid with plenty of water and soap.
- In the event of eye contact, immediately rinse the eye, including under the eyelid, with clean water for at least 15 minutes. Direct a soft stream of water directly into the eye, do not rub. Seek medical attention immediately.

2.1.3 Dangers caused by mechanical elements

Falling parts

⚠ WARNING

Danger of injury due to falling parts

During operation, material may fall off unexpectedly and cause severe injuries.

- Mark out the danger zone clearly and cordon it off.
- Do not enter the danger zone during normal operation.
- Never place objects on the safety fence around the working basket.

Outriggers and booms

⚠ DANGER

Crushing hazard at supports and boom!

There is a crushing hazard when bracing or swivelling the machine.

- Make sure that no people, supply lines or other objects are within the area of the outrigger base during bracing.
- Ensure that no persons are in the danger zone while the machine is slewing.
- Make sure that no people are in the danger zone when moving into transport position.

Insufficient stability

⚠ WARNING

Danger of injury due to insufficient stability

If the machine is not sufficiently stable, there is a risk that it may tip or slip over. This can cause severe or even fatal injuries.

- Make sure that the base on which the machine is sufficient has sufficient load-bearing capacity.
- Do not exceed the maximum slope.
- Secure the machine against slipping when on inclines or gradients.

Crawler operation

⚠ WARNING

Risk of fatal injury due to body parts being dragged into and caught in the chain drive!

Running chains and rotating chain wheels can drag in items of clothing or trap body parts, causing serious to fatal injuries.

- During operation, do not reach into running chains or chain wheels.
- Prevent access to chain drives during operation. Do not open any covers.
- When in the danger zone, wear close-fitting protective clothing with a low tear strength.
- Before performing any work on the chains or chain wheels, switch off the machine and secure it against restart. Wait until all components have come to a standstill.
- During operation, maintain a suitable safety distance.
- Note any change of direction.

⚠ WARNING

Risk of injury if body parts are run over!

The crawler chassis poses a risk of crushing body parts, potentially resulting in serious or fatal injuries.

– During operation, do not reach into running chains or chain wheels.
– During operation, maintain a suitable safety distance.
– Note any change of direction.
– Do not drive over power lines.

2.1.4 Hazards due to hydraulic energies

Hydraulics

⚠ WARNING

Risk to life from hydraulic energy!

Hydraulically driven moving parts can cause severe injuries.

– Work on the hydraulic system must only be performed by hydraulics experts.
– Before starting work on the hydraulic system, fully depressurise it.
– Do not reach into or work on moving parts during operation.
– Do not open covers during operation.
– When in the danger zone, wear close-fitting protective clothing with a low tear strength.

2.1.5 Hazards due to high temperatures

Hot surfaces

⚠ WARNING

Risk of injury from hot surface!

The surfaces of motor components can become very hot during operation. Skin contact with the hot surfaces will cause serious burns to the skin.

– Avoid contact with hot motor components such as the exhaust system, radiator, hoses and motor block.
– Before performing any work on motor components, check whether they are hot. Allow them to cool down if necessary.

2.1.6 Hazards due to chemical substances

Antifreeze agent

⚠ WARNING

Health hazard due to antifreeze agent!

The coolant of the diesel engine consists of a mixture of water and antifreeze agent. Antifreeze agent can cause serious damage to health if touched, swallowed or inhaled.

- Avoid contact with the antifreeze agent.
- Do not eat, drink or smoke when handling antifreeze agent. Wash your hands before breaks and when you finish work.
- Wear protective gloves when working with antifreeze agent.

Measure after contact with antifreeze agent:

- After skin contact, wash the affected areas with plenty of water.
- After contact with the eyes, rinse them thoroughly with plenty of water for at least 15 minutes and consult a physician.
- After swallowing, rinse with water and then drink plenty of water. Consult a physician.
- Go outside in the fresh air after inhaling aerosols.

Motor oil

⚠ WARNING

Risk of injury from motor oil!

Motor oil contains toxic substances that can cause inflammations and are carcinogenic.

- Avoid any skin contact with motor oil.
- In the event of inadvertent skin contact, immediately wash the affected areas with soap. Never use petroleum ether, solvents or other chemical detergents.

Hydraulic oil

⚠ DANGER

Risk of injury from hydraulic oil!

Skin contact with hydraulic oil can cause skin disease and serious injury.

- Prevent all contact between skin and hydraulic oil.
- In the event of inadvertent skin contact, immediately wash the affected areas with soap. Never use petroleum ether, solvents or other chemical detergents.
- In the event of contact with a high-pressure hydraulic oil jet, seek medical attention immediately.

⚠ DANGER

Risk of injury from hydraulic oil jet!

Subcutaneous injection of hydraulic oil can cause serious or even fatal injury.

– Get affected persons to a hospital immediately or, in the case of eye injuries, to an ophthalmic clinic.
– Even if there is only the slightest suspicion or minor externally visible injury, affected persons must seek medical attention immediately.

2.1.7 Hazards due to expelled gases

⚠ DANGER

Danger due to potentially explosive gases!

On gas-operated machines, gases can spread out and lead to the formation of a flammable mixture.

– Before starting up each day, inspect the gas cylinders, gas line and engine components for leaks and damage.
– After work is finished, close the shut-off valves on the gas cylinders.
– Only operate the machine outdoors or in well-ventilated rooms.
– If you smell gas, stop immediately, close the gas cylinders and cordon off the machine and surrounding area.
– Observe local regulations for gas-operated machines.

2.1.8 Dangers due to collisions

⚠ DANGER

Danger due to collision

If the machine collides with stationary or moving objects, this can cause significant damage to the machine and result in severe injury for the operating personnel.

– Avoid collisions with stationary objects such as building structures.
– Avoid collisions with other moving objects such as vehicles, cranes and aerial access platforms.

2.1.9 Dangers caused by modifications to the machine

⚠ DANGER

Danger due to modifications to the machine!

Modifications to the machine can lead to significant property damage and cause severe or even fatal injuries.

- Any modifications made to either the machine as a whole or parts thereof that affect its stability, strength or operating procedures shall constitute a “significant modification” or “significant repair” in accordance with EN 280 Section 7.1.1.6. As a result of such modifications, the machine must be subjected to a preliminary inspection, a design inspection and an acceptance test in accordance with the scope of the modifications/repairs in question.
- Never carry out modifications on the machine without written consent from the manufacturer.

2.2 Proper use

The machine is designed and constructed exclusively for the proper use described here.

The machine must be used exclusively to convey people and tools up to the maximum allowable platform load, in order to allow said people to perform work in high places.

Proper use also includes adherence to all the specifications in these instructions.

Any use that goes beyond or differs from the proper use shall be deemed misuse.

⚠ DANGER

Danger due to misuse!

Misuse of the machine can lead to dangerous situations.

- Never operate the machine without PPE.
- Never use the machine to support loads.
- It is prohibited to use the aerial access platform as a crane.
- Never use the aerial access platform for lateral pulling.
- Do not use the machine in or near unprotected live parts of electrical systems.
- Never operate the machine in potentially explosive atmospheres.
- Never attach excess loads to the platform or place them inside it. (For example, do not place branches or large chunks of wood in or across the platform when performing tree-felling operations.)
- Never overload the platform.
- Do not use additional objects (such as ladders) to expand the work area.
- Never lean out of the platform.
- Never climb over the safety fence around the platform.
- Never climb or step on the knee-high bar on the platform.
- It is prohibited to attach parts of any kind that would increase the wind force to which the work platform is subjected (e.g. boards for writing on).
- It is prohibited to walk onto or off the platform when the boom system is lifted.
- It is prohibited to operate the machine unless all persons in the platform are wearing a safety harness and PPE.
- It is prohibited to bypass any part of the safety equipment.
- It is prohibited to tamper with the detection contact on the radio remote control (optional).
- It is prohibited to operate the machine when the specified maximum wind speed is exceeded (see machine type plate).

No claims of any kind can be asserted for damage resulting from misuse.

2.3 Responsibility of the owner

Owner

The owner is the person or entity that operates the machine for commercial or economic purposes or who transfers the machine to a third person for use/application, and that bears the legal responsibility for protecting the user, personnel, or third parties in question.

Duties of the owner

The machine designed for commercial use. The owner of the machine is thus subject to the legal obligations for occupational safety.

In addition to the safety instructions in these instructions, the valid safety, accident prevention, and environmental protection regulations applicable to the machine's area of application must be adhered to.

In particular, the following requirements apply:

- The owner must ensure that they are aware of the applicable occupational safety provisions and conduct a risk assessment to determine the risks that may arise due to the specific working conditions at the machine’s place of use. The owner must use this information to draw up the operating instructions for the machine.
- Throughout the entire time the machine is used, the owner must monitor whether the operating instructions they have provided correspond to the current state of regulations, and adjust the operating instructions if necessary.
- The owner must clearly organise and define responsibility for installation, operation, troubleshooting, maintenance and cleaning.
- The owner must ensure that all employees who handle the machine have read and understood these instructions. The owner's staff must also be trained and informed of the hazards.
- The owner must provide the personnel with the necessary protective equipment and instructions that wearing the necessary protective equipment is mandatory.
- Furthermore, the owner is responsible for ensuring that the machine is always in technically perfect condition. The following requirements therefore apply:
- The owner must ensure that the maintenance intervals described in these operating instructions are adhered to.
- The owner must check the safety devices or have them checked by an authorised person to make sure that they are in perfect working order before commissioning.
- The owner must draw up procedural instructions to be followed in case of an accident (e.g. on how to rescue people in the working basket).

2.4 Personnel requirements

2.4.1 Qualifications

Qualifications

⚠ WARNING

Risk of injury due to insufficient qualification of personnel!

If unqualified personnel perform work on the machine or remain within the danger zone, serious injury and significant material damage may result.

– All work must be carried out by qualified personnel only.
– Keep unqualified personnel away from danger zones.

In these instructions, the personnel qualifications listed below are specified for the various areas of activity:

Trained persons

During a briefing session conducted by the owner, the individuals were verifiably instructed in the proper use of the machine without having had previous knowledge. The briefing included information on how the machine works and the potential hazards arising from its use.

Qualified electrician

Due to their professional training, knowledge, experience and knowledge of applicable standards and regulations, qualified electricians are able to carry out work on electrical systems and to independently recognise and avoid potential hazards.

Qualified electricians have been trained specifically for their particular working environment and are familiar with the relevant standards and regulations.

A qualified electrician must meet the requirements of the applicable lawful regulations for accident prevention.

Qualified personnel

Due to their professional training, knowledge, experience and knowledge of applicable standards and regulations, qualified personnel are able to carry out tasks assigned to them and to independently recognise and avoid potential hazards.

Hydraulics experts

Hydraulics experts are specially trained for the task area in which they are active and are familiar with the relevant standards and regulations.

Due to their professional training and experience, hydraulics experts can perform work on hydraulic systems and independently recognise and avoid potential hazards.

Qualified personnel for the drive unit

Due to their professional training, knowledge, experience and knowledge of applicable regulations, qualified personnel for the drive unit are able to carry out the work assigned to them and independently recognise and avoid potential hazards. Our customer service is available for performing any required work on the drive unit. Please see page 2 for the contact data.

Experts

Experts are persons who, based on their professional training and experience, have sufficient knowledge in the field of aerial platforms and are sufficiently familiar with the applicable national regulations, accident prevention regulations and generally recognised rules of technology (e.g. employer's liability insurance rules, DIN

standards, VDE regulations, technical rules of other member states of the European Union or other treaty states of the Agreement throughout the European Economic Community) that they can assess whether aerial platforms are safe for operation.

Personnel may only include persons who are at least 18 years of age and who can be expected to perform their work reliably. People whose ability to react is influenced, e.g. by drugs, alcohol or medicines, are not allowed.

2.4.2 Unauthorised personnel

⚠ WARNING

Risk to life for unauthorised persons due to hazards in the danger and work area!

Unauthorised persons who do not meet the requirements described here are unaware of the hazards in the work area. As such, there is a risk of severe injury or death for unauthorised persons.

- Keep unauthorised persons away from the hazard and work area.
- In case of doubt, speak to individuals and ask them to leave the hazard and work area.
- Interrupt work as long as unauthorised persons are present in the hazard and work area.

2.4.3 Training

The owner has been instructed by the manufacturer. The personnel must be instructed accordingly by the owner.

2.5 Personal protective equipment

Personal protective equipment protects staff from hazards which may compromise their safety or health whilst working.

Staff must wear personal protective equipment when performing any work on and with the machine. Specific reference will be made to this requirement wherever necessary in the individual sections in these instructions. A description of this personal protective equipment is provided in the following:

- It is imperative that the personal safety clothing and equipment required in the various chapters of these instructions is put on before starting the work.
- Adhere to the signs in the working area regarding personal protective equipment.

Description of the personal safety clothing and equipment

Protective work clothing



Fig. 2

Occupational safety clothing is close-fitting work clothing with a low tear strength, with close-fitting sleeves and no protruding parts. It primarily is used to prevent being caught up in moving parts of the machine. Do not wear rings, chains or other items of jewellery.

Safety harness



Fig. 3

The safety harness is used to provide protection from falling in situations in which there is an increased risk of falls. There is an increased risk of falls when certain heights are exceeded and the work location is not safeguarded by a railing.

Wear the safety harness so that the safety rope is connected to the safety harness and a fixed fastening point.

Safety harnesses must only be used by specially trained personnel.

Safety goggles



Fig. 4

Safety goggles are used to protect the eyes from flying parts and splashed liquids.

Protective helmet



Fig. 5

The safety helmet provides protection from falling or flying parts and materials.

Safety boots



Fig. 6

Safety boots are used to provide protection from heavy, falling objects and slipping on slippery surfaces.

2.6 Position of the safety device

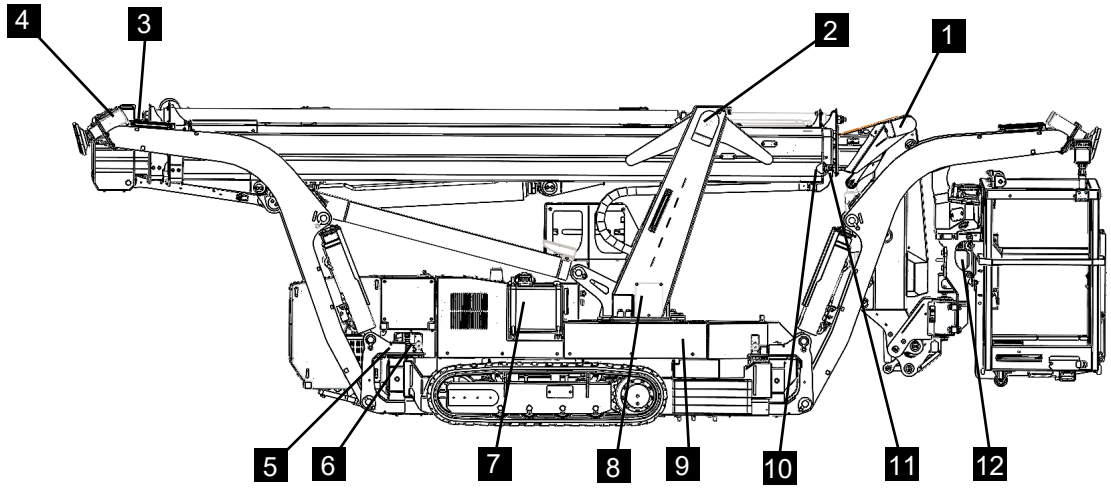

Fig. 7

1	Angle sensor for jib	7	Contamination indicator for hydraulic oil
2	Angle sensor for lower boom	8	Inclination sensor for chassis
3	Angle sensor for upper boom	9	Angle sensor for lift boom holder
4	Limit switch, floor pressure	10	Initiator, lower boom retracted
5	Limit switch, outrigger position (1x per outrigger)	11	Limit switch, lower boom rope break (extending side)
6	Outrigger lock limit switch (1x per outrigger)	12	Load cell

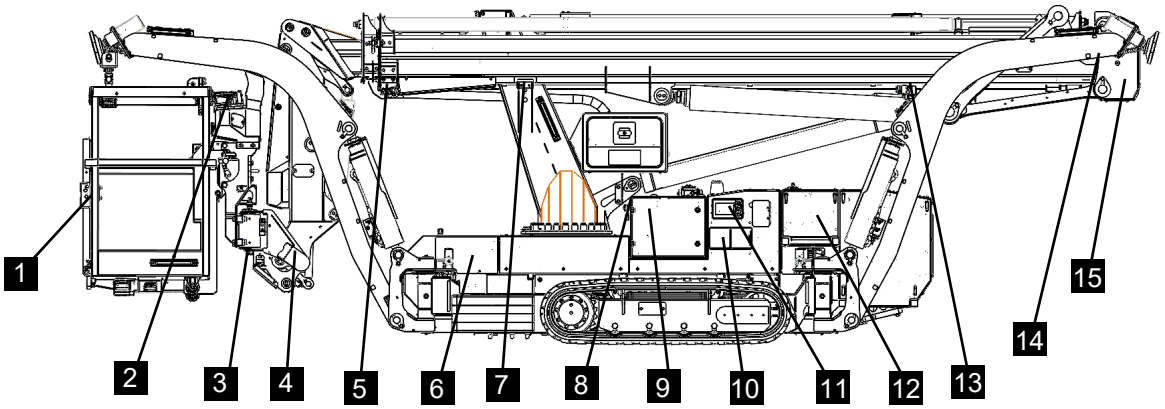

Fig. 8

1	Initiator, platform ladder monitoring (optional)	9	Control box
2	Emergency stop button on control panel	10	RC circuit breaker
3	Inclination sensor, platform level	11	Display chassis
4	Angle sensor for platform angle	12	Battery cut-off switch
5	Limit switch, retraction rope rope break	13	Pressure sensors, upper boom cylinder
6	Valves for emergency operation	14	Initiator, upper boom retracted
7	Initiator, upper boom in transport position	15	Angle sensor for upper boom
8	Emergency stop button on the chassis control box		

2.7 Description of the safety devices

Emergency stop button

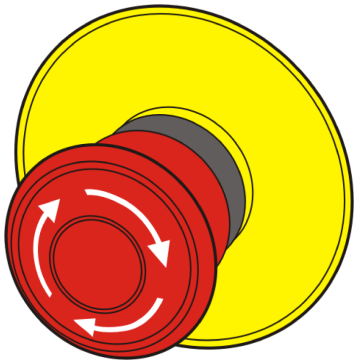

Fig. 9

Pressing the emergency stop button stops the machine through immediate switching off of the power supply. After the emergency stop button has been pressed, it must be unlocked by turning or pulling it in order to switch the machine back on again. The emergency stop button on the radio remote control must be unlocked by turning it.

⚠ WARNING

Risk of fatal injury from switching back on in an uncontrolled manner!

Switching the machine back on in an uncontrolled manner can cause serious or even fatal injuries.

– Before switching back on again, make sure that the cause for the emergency stop has been cleared and that all safety devices have been installed and are fully functional.
– Do not release the emergency stop button until there is no longer any risk.

Limit switches

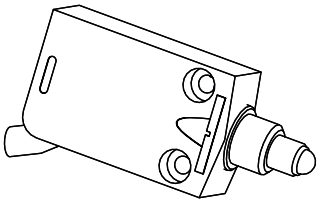

Fig. 10

Limit switches query the correct position of certain components. They can thus, for example, prevent unintended travel of the machine.

Proximity switches

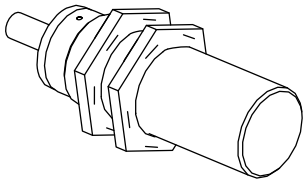

Fig. 11

Proximity switches query the correct position of certain components. They can thus, for example, record a specific position of the platform.

Angle of rotation sensors

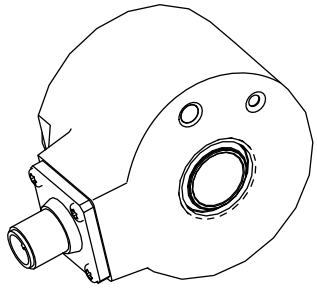

Fig. 12

The angle sensors monitor the angle of the lift boom holder, the lower boom, the upper boom and the working basket/lifting device. Depending on the conditions, fault messages may be issued, the lowering speed may be regulated and the correct position for lowering into the transport position may be displayed as a result.

Inclination sensor

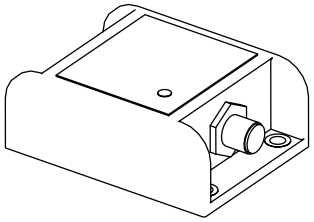

Fig. 13

During automatic stabilisation, the machine is automatically aligned horizontally with the help of the inclination sensor.

In the vicinity of the boom system, the level of the platform or the lifting device is monitored.

Battery cut-off switch/Battery isolating plug

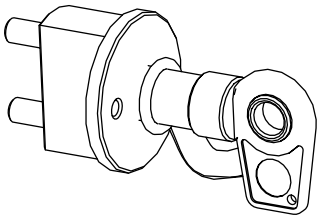

Fig. 14

The battery cut-off switch is always near the battery. The battery can be disconnected from the vehicle power circuit by means of the battery cut-off switch. This is recommended, for example, before long-term storage of the machine.

Valves for emergency operation and service mode

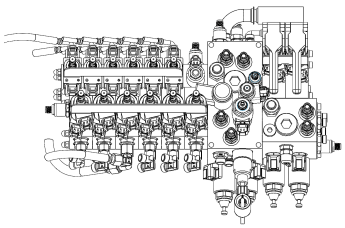

Fig. 15

The machine can be operated in emergency operation if the power supply fails or for maintenance purposes. A number of valves allow the various movements to be executed using a hand pump or electric auxiliary drive.

Battery monitor

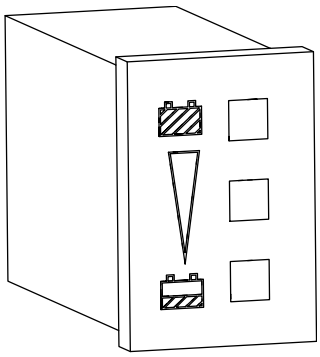

Fig. 16

The battery monitor displays the current battery capacity.

RC circuit breaker

The RC circuit breaker is designed to interrupt all power supply phases in the event of insulation failure through a dangerous contact voltage.

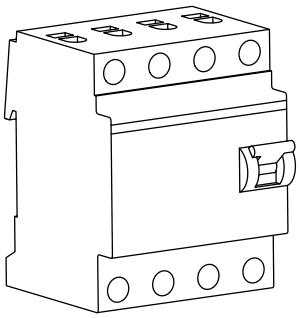

Fig. 17

Load cell

The load cell measures the load.

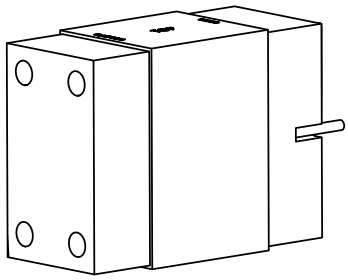

Fig. 18

2.8 Symbols on the machine

⚠ WARNING

Risk of injury from illegible symbols!

Over time, stickers and signs may become soiled or become illegible in other ways. As a result hazards may not be recognised and it may not be possible to follow the necessary operating instructions. This will result in a risk of injury.

– Always keep all safety, warning and operating instructions in fully legible condition.
– Replace damaged signs or stickers immediately.

NOTICE

Replacement stickers can be ordered from the manufacturer. Please specify the item number with your order.

Please see page 2 for the contact data.

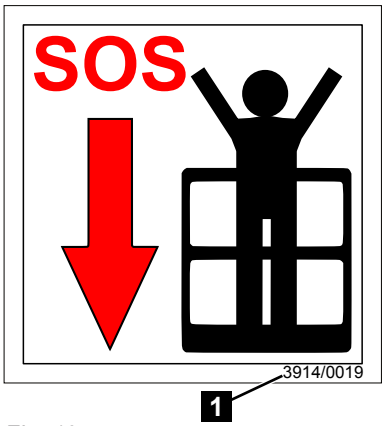

Fig. 19

Each sticker has an item number. This article number may be found in various positions on the sticker. In the example (item 1) 3914/0019 (Fig.19/1).

A list of the stickers and symbols used and their respective positions is included in the appendix (↳Chapter 10 „Appendix”, on page 183).

2.9 Behaviour in case of fire and accidents

Preventive measures

- Always be prepared for fire and accidents.
- Always keep first aid equipment (first aid kit, blankets, etc.) and fire extinguisher fully functional and on hand.
- Familiarise personnel with accident reporting, first aid, and rescue equipment.
- Keep access routes for rescue vehicles clear.
- The owner must draw up a plan of action for rescuing persons at the location in question.

Measures in case of fire and accidents

- Immediately trigger an emergency stop with the emergency stop device.
- If there is no risk to your own health, rescue people from the danger zone.
- Provide first aid as necessary.
- Alert the fire brigade and/or rescue service.
- In case of fire: If there is no danger to your health, fight the fire with fire extinguishing equipment and continue firefighting until the fire department arrives.
- Inform the responsible party at the location of use.
- Free the access routes for rescue vehicles.
- Direct the rescue vehicles.

2.10 Environmental protection

Environmental protection

Risk to the environment due to incorrect handling of materials which can harm the environment!

In case of incorrect handling of materials which can harm the environment, especially improper disposal, there can be significant damage to the environment.

– Always heed the notes below about the handling of materials which can harm the environment and their disposal.
– If materials which can harm the environment accidentally escape into the environment, take suitable measures immediately. In case of doubt, inform the responsible local authority about the damage and ask what suitable measures to take might be.

The following harmful substances are used:

Liquid cleaning agents

Liquid cleaning agents containing solvents include toxic substances. They must be prevented from entering the environment. They must be disposed of by a specialist disposal company.

Lubricants

Lubricants such as greases and oils contain toxic substances. They must be prevented from entering the environment. They must be disposed of by a specialist disposal company.

Hydraulic oil/motor oil

Hydraulic oil can cause long-term damage to bodies of water. It must be prevented from entering the environment. They must be disposed of by a specialist disposal company.

Fuels

Fuels contain toxic substances. They must be prevented from entering the environment. They must be disposed of by a specialist disposal company.

Rechargeable and disposable batteries

Rechargeable and disposable batteries contain toxic heavy metals. They require treatment as toxic waste and must be submitted to municipal collection points or collected for disposal by specialists.

Cooling water with antifreeze

Cooling water and antifreeze contain toxic substances. They must be prevented from entering the environment. They must be disposed of by a specialist disposal company.

2.11 IT vulnerabilities

The machine has no interface for remote maintenance and is not intended to receive operating system updates.

The machine is at risk of access to internal interfaces, which could allow modifications to be made to the machine software.

The interfaces are located in the locked control cabinet and are not accessible from the outside.

After commissioning, the operator is responsible for restricting physical access to the machine’s IT systems to ensure IT security.

Should the operator detect any IT security incidents (that could potentially affect machine safety), TEUPEN Maschinenbau GmbH must be contacted immediately, and the machine must be taken out of service.

3 Technical data

3.1 Dimensions

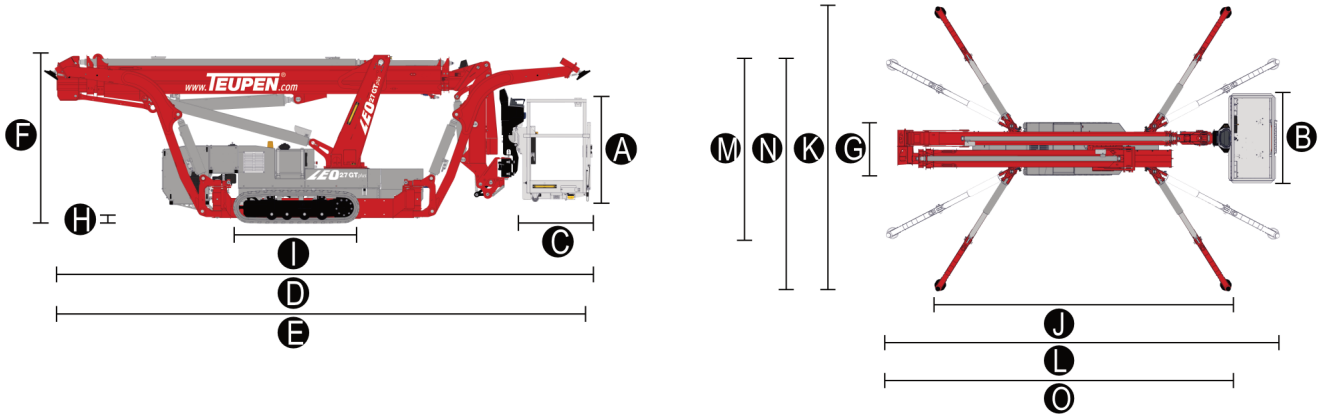

Fig. 20

Specification	LEO27GTplus
Platform (height) **(A)**	1,10 m
Platform (length) **(B)**	1,40 m
Platform (width) **(C)**	0,70 m
Overall length (min.) **(D)**	6,45 m
Length without platform **(E)**	6,45 m
Overall height (min.) **(F)**	1,99 m
Overall width (min.) **(G)**	0,89 m
Ground clearance (max.) **(H)**	0,31 m
Track (length x width) **(I)**	1,50 x 0,23 m
Wide bracing (length) **(J)** X (width) **(K)**	4,90 m / 4,70 m
Narrow bracing (length) **(L)** X (width)**(M)**	6,50 m / 2,99 m
Narrow bracing, left or right (width) **(N)**	3,90 m
Narrow bracing, front or rear (length) **(N)**	5,68 m
Outrigger plate **(Ø)**	0,18 m

3.2 Work diagram of aerial access platform

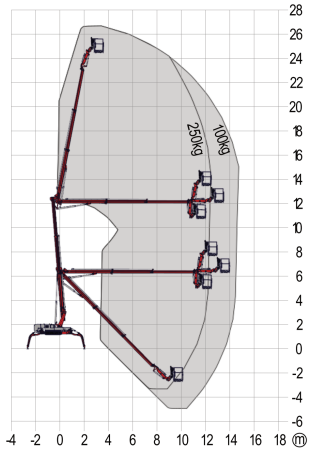

Fig. 21

The work diagram illustrates the work area of the aerial access platform.

3.3 Performance

Specification	LEO27GTplus
Platform height (max.)	25 m
Working height (max.)	27 m
Horizontal outreach, 250 kg platform capacity	12,50 m
Platform load (max.)	250 kg
Jib, movable	160°
Assembly rotation range (max.)	450°
Ground slope to stabilise, max.	16,7° /30%
Permissible slope (max.)	0,5°
Chassis, height & width adjustable	26 / 42 cm
Gradeability in direction of travel	16,7° /30%
Slope angle	16,7° / 30%
Travel speed	2,5 km/h
Permissible lateral force (max.)	400 N
Maximum lift, lowering, telescoping speeds	0,4 m/s
Maximum operating pressure	210 bar
Permissible wind speed (max.)	12,5 m/s

The weight and dimensions may vary depending on options and accessories.

3.4 Weights and loads

Specification	LEO27GTplus
Net weight	3870 kg
Load capacity in travelling position	4,9 kN/m²
Load capacity in work position (wide)	1,75 kN/m²
Point load per outrigger plate (max.)	29,00 kN

The weight and dimensions may vary depending on options and accessories. The machine's precise weight is specified on the type plate.

3.5 Drives

3.5.1 Combustion engine

Diesel: Kubota D 902

Specification	Value	Unit
Performance	16.1 (14.7)	kW (hp)
Fuel tank capacity	11.5	l

3.5.2 Electric motor

Specification	Variant 230 V
Voltage (V)	230
Current (A)	12.9
Power (kW)	2.2
Frequency (Hz)	50

3.5.3 Electric auxiliary drive

Specification	Value	Unit
Voltage	12	V

3.6 Emissions

Specification	Value	Unit
Noise when driven by electric motor	< 70	dB(A)
Noise when driven by battery	< 70	dB(A)
Noise when driven by diesel engine	< 89	dB(A)
Noise when driven by petrol engine	< 89	dB(A)
Noise when driven by gas engine	< 89	dB(A)

Some of the drives listed here are not available for this machine.

3.7 Operating conditions

Specification	Value	Unit
Maximum permissible wind speed in operation	0,4 m/s	m/s (Bft)
Temperature range		°C
Height		m

3.8 Consumables

Consumables 1

Symbol	Consumable	TEUPEN item number
▲	Multi-purpose lubricant	600779
▲	High-performance lubricant	3917/0103
▲	Spray grease	600777
▲	Wire rope spray	600821
▲	Track spray	600784
▲	Cleaning products	600854

	Crawler chassis	Chassis	Boom holder	Profiles	Basket/load boom
Tensioning crawler track	▲				
Sliding surfaces	▲			▲ ▲	
Rotating assembly			▲		
Articulated joints	▲	▲	▲	▲	▲
Retraction/extension chains				▲	
Retraction/extension ropes				▲	

Consumables 2

Symbol	Consumable	Type	TEUPEN item number
●	Hydraulic oil	Plantohyd 32-S	3917/0066
●	Hydraulic oil	Plantohyd 22S	3917/0096
●	Hydraulic oil	Panolin HLP Synth 32	3917/0079
●	Hydraulic oil	Panolin HLP Synth 46	3914/0140
●	Hydraulic oil	Renolin MR15	303566
●	Hydraulic oil	Renolin B32HVI	300511
●	Hydraulic oil	Hydrex MV 22	600958
●	Gearbox oil	Gearbox oil	3917/0122
●	Motor oil	10 W–40 W	3917/0138
●	Antifreeze agent	-	300413
●	Demineralised water	-	600778

	Crawler chassis	Diesel motor	Petrol motor	Battery drive	Hydraulic tank
Motor oil		●	●		
Coolant		● ●			
Battery acid				●	
Gearbox	●				
Hydraulic tank					●

Hydraulic oil ●

The type of hydraulic oil used is indicated on the sticker on the hydraulic tank. Different types of hydraulic oil must not be mixed.

3.9 Filling quantities

	LEO27GTplus
Hydraulic oil system	Approx. 45
Hydraulic oil tank	Approx. 50
Fuel tank	11.5
Gearbox oil	max. 1
Kubota D902 **Motor oil**	3.7
Kubota D902 **Coolant**	4.0

The filling quantities are specified in litres.

3.10 Type plate

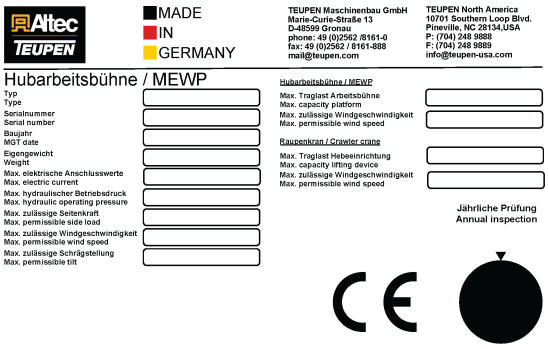

Fig. 22

- Manufacturer
- Type
- Serial number
- Year of manufacture
- Net weight
- Crawler crane load
- Working basket load
- Maximum occupancy in the working basket
- Maximum electrical connected loads
- Maximum hydraulic operating pressure
- Maximum permissible lateral force
- Maximum permissible wind speed
- Maximum permissible tilt

4 Construction and function

4.1 Overview

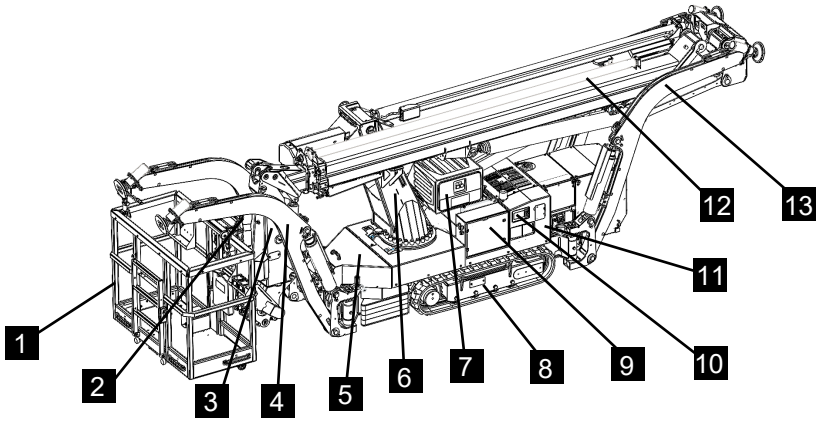

Fig. 23

1	Working basket	8	Left crawler chassis
2	Control panel	9	Control box
3	Jib	10	Display chassis
4	Outrigger 4	11	Electric motor
5	Emergency control	12	Upper boom
6	Turntable	13	Outrigger 3
7	Stowage space		

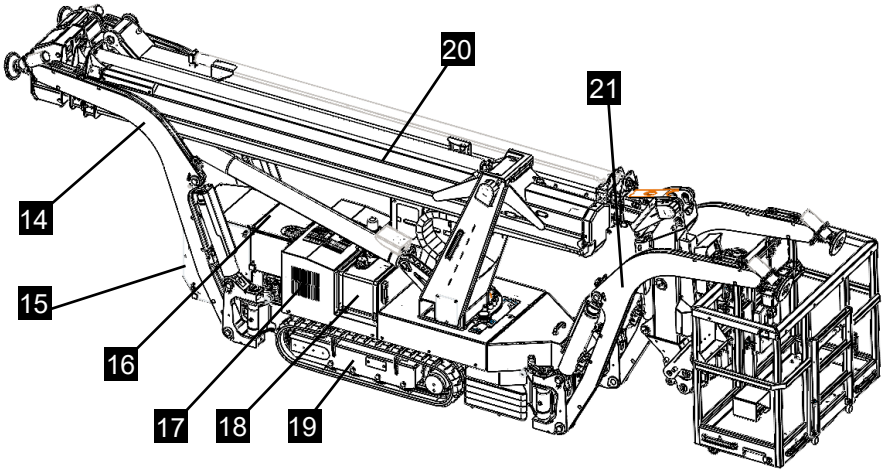

Fig. 24

14	Outrigger 2	18	Hydraulic oil tank
15	Drive unit	19	Right crawler chassis
16	Fuel tank	20	Lower boom
17	Hydraulic oil cooler	21	Outrigger 1

4.2 Brief description

The aerial access platform is used for performing work at heights. It can be controlled using a radio remote control.

To put the machine in work position, the chassis is lifted automatically or manually using the outriggers. The boom system cannot be operated until the chassis has been levelled correctly.

The electrohydraulic quick stabilisation system features automatic stabilisation, ground sensors and abrasion-resistant outrigger pads. Different outrigger positions can be set:

- Wide on both sides
- Narrow one-sided (left)
- Narrow one-sided (right)
- Narrow two-sided
- Wide at the front – narrow at the rear
- Narrow at the front – wide at the rear

The heights of the left and right chassis can be adjusted independently of one another hydraulically, enabling precision manoeuvring using a sensitive wireless remote control.

Negative underride function up to 5 metres below the positioning height is possible. The platform can rotate 180°, providing additional flexibility, and it is kept horizontal at all times by an electrohydraulic balancing system.

All the functions of the boom system and its telescoping lower and upper booms can be controlled using the radio remote control. The jib can move up to 165° and has a platform replacement system. The coming home function ensures that the work platform automatically moves back into the transport position.

The power is supplied either by the mains supply (construction site feed) using an extension cable or by a combustion engine that can be activated and stopped using a radio remote control. Battery operation is also possible, as an option.

Further equipment and safety features:

- Socket in the platform (230 V / 16 A)
- USB port in the control panel (5 V)
- Socket in the control panel (12 V / 5 A)
- Machine movable without platform
- Lockable stowage space
- Protected, indoor energy supply for platform control
- Hydraulic system filled with bio-degradable oil as standard
- High-quality paintwork in RAL 3020 (red)
  - hydraulic cylinder in RAL 9006 (white aluminium)
  - drive unit & component carrier in RAL 9006 (white aluminium)
- Hydraulically unlockable load-holding valves located directly on the hydraulic cylinder
- Pressure limiting valves for safeguarding hydraulic system
- Hydraulic tank, emergency control and connecting cables are protected
- Colour display in the control panel
- Additional colour display in the chassis
- TEUPEN Fuzzy V control technology with new inductive operating concept
- Hydraulic auxiliary drive for recovering the boom system (optional)

4.3 Assembly description

4.3.1 Crawler chassis

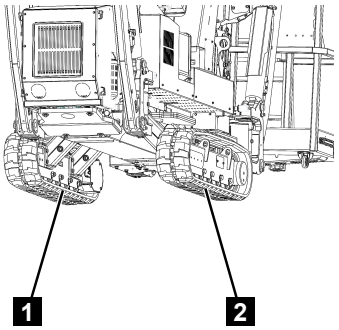

Fig. 25

When in the transport position, the machine can be moved using the crawler chassis. Chain tensioning can be carried out using only a grease gun. When the chassis is adjusted hydraulically, the height and width of each crawler chassis can be set individually.

4.3.2 Bracings

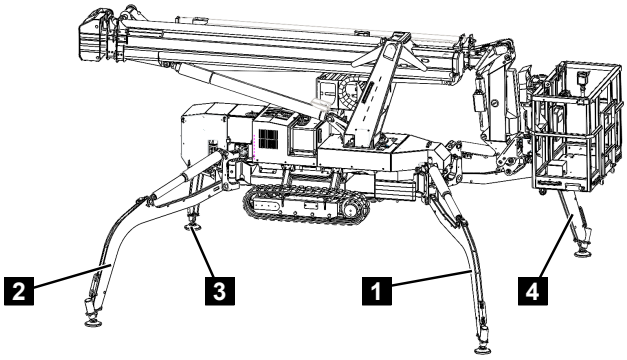

Fig. 26

With the aid of the outriggers Outriggers/1–4), the chassis is lifted, thereby bringing the machine into work position. The outriggers are numbered consecutively in accordance with the position numbers. They can each independently of the others be moved to one of six different work positions: wide, narrow, narrow-wide and wide-narrow, front wide rear narrow, and rear wide front narrow.

4.3.3 Boom system

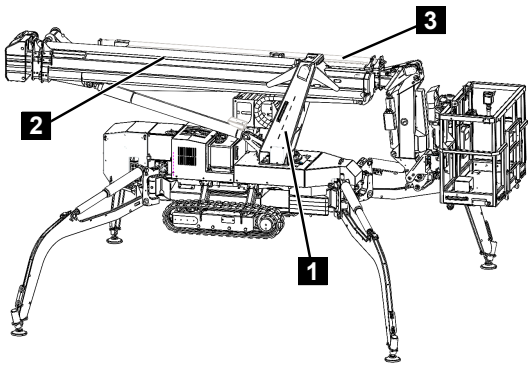

Fig. 27

The boom system essentially comprises the lift boom holder (Fig.27/1), the telescoping lower boom (Fig.27/2), the telescoping upper boom (Fig.27/3) and an additional jib.

4.3.4 Working basket

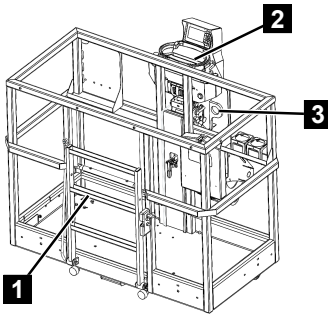

Fig. 28

The number of persons permitted in the platform is indicated on a sticker on the platform. The ladder (Fig.28/1) can be used to enter the platform. The machine can be controlled using the control panel (Fig.28/2). The fastening points to the right and left of the control panel (Fig.28/3) are intended for use with a safety harness. The operating instructions, including the hydraulics diagram and circuit diagram, are kept in the optional document box. Further optional equipment is described in (↳Chapter 4.8.1 „Accessories (optional)”, on page 62).

4.3.5 Combustion engine

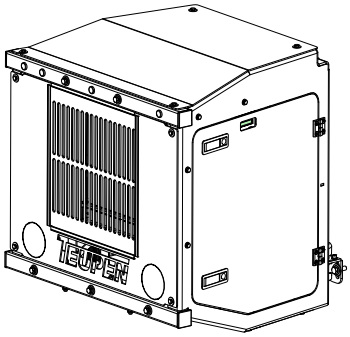

Fig. 29

The combustion engine (Fig.29) together with the hydraulic power pack generates the required hydraulic pressure supply.

4.3.6 Battery drive

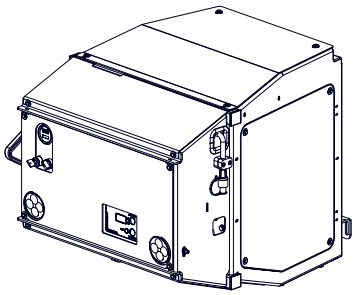

As an alternative drive unit in place of the combustion engine, the required hydraulic pressure supply can be provided by the battery drive (Fig.30).

Fig. 30

4.3.7 Electric motor

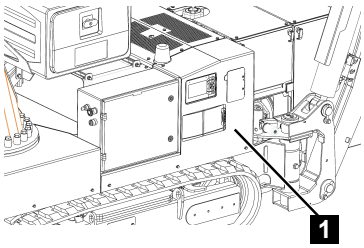

The necessary hydraulic pressure supply can also be generated by the electric motor. This is located under the cover in the front part of the machine (Fig.31/1).

Power is supplied by a construction-site feed.

Fig. 31

4.4 Operating elements and displays

4.4.1 Control panel and radio remote control

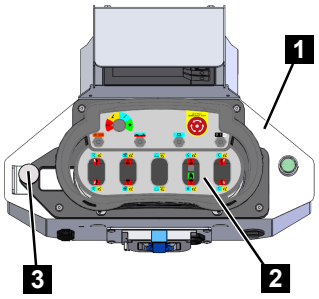

Fig. 32

The operating elements found on the control panel (Fig.32/1) and the radio remote control (Fig.32/2) are described below.

1 - Control panel lighting The radio remote control is inserted into the control panel.

2 - Radio remote control The radio remote control is used to operate the machine.

3 - Locking Radio remote control Unlock the radio remote control by pulling up the toggle and pulling out the slider (Fig.32/3).

Control panel

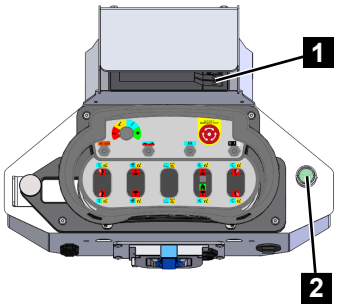

Fig. 33

1 - Graphic display

The graphic display (Fig.33/1) shows the user the movements available with the respective functions. If an impermissible movement is selected, warnings and information messages are shown. The display is also where fault codes and fault descriptors are shown.

2 - Control unit reactivation button

Reactivates the control unit from standby mode (Fig.33/2).

Radio remote control

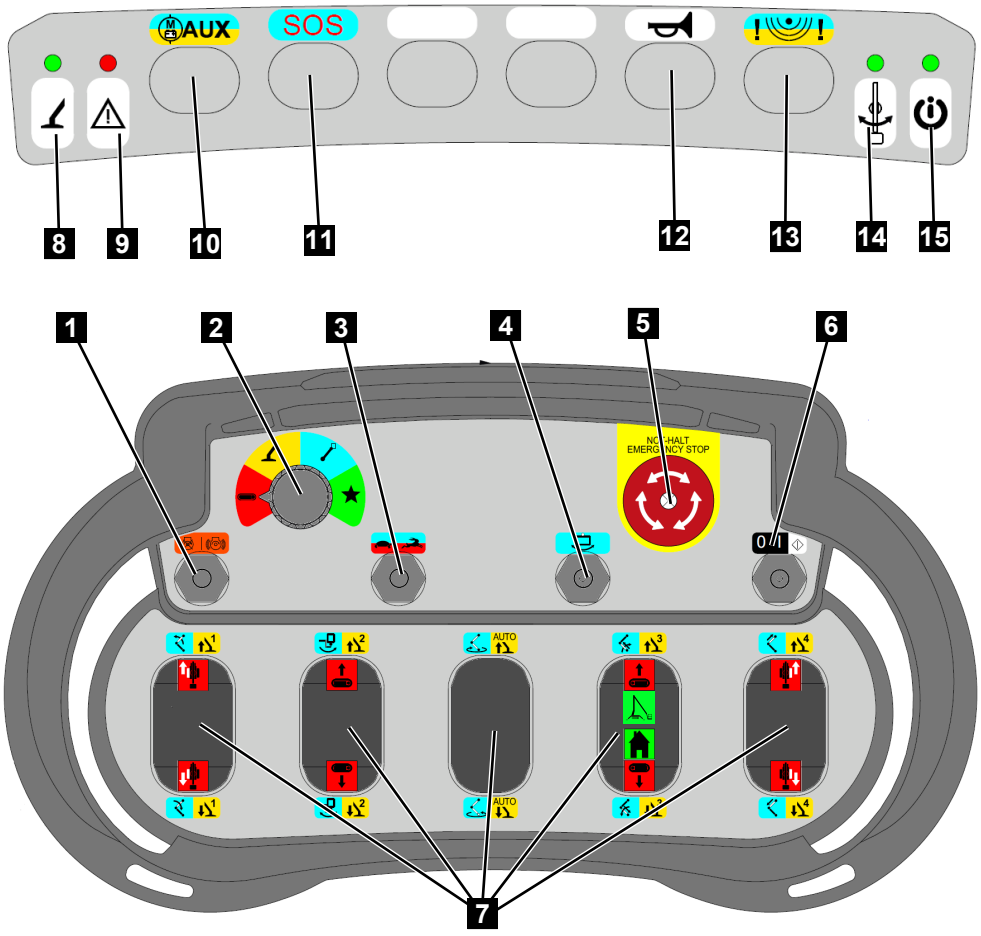

Fig. 34

1 - Motor start/stop button The button starts and stops the combustion engine.

2 - Function selection switch The function selection rotary switch switches between the crawler, outrigger, boom function or special function.

3 - Crawl/fast speed mode button Selects the crawl/fast operating mode when the crawler or boom function is selected.

4 - Rotate platform button The button is used to rotate the platform.

5 - Emergency stop button There is an emergency stop button on the radio remote control. Once it has been actuated, it must be unlocked by turning it before the machine can be operated again.

6 - Radio remote control on/off Switches the radio remote control on and off and pairs it. If an error message or fault occurs, pairing again can trigger a control unit reset.

7 - Control levers Depending on which operating function is selected and the position of the function selection lever, the corresponding colour-coded functions can be executed using the control levers.

8 - Outrigger lamp

Lights up continuously green when the machine is not stabilised correctly.
Flashes green when the machine is not stabilised correctly.

9 - Fault lamp

Lights up continuously when there is a fault and flashes when a message is shown on the display.

10 - Auxiliary drive button

Used to activate the electric auxiliary drive (optional).

11 - Override button

Overrides the safety functions in the event of faults.

12 - Horn button

13 - Collision button

The collision button can be used to override **restrictions on the boom system**. The operator assumes full responsibility for the boom system movements activated by the collision button.

14 - Boom system lamp

Lights up when the boom system is in the centre position.

15 - Status lamp Radio remote control

Flashes green when the radio remote control is switched on and paired and the battery is charged. It flashes red-green when the battery is detected to be low. A buzzer sounds about 1 minute before the receiver switches off.

4.4.2 Control panels on the control box

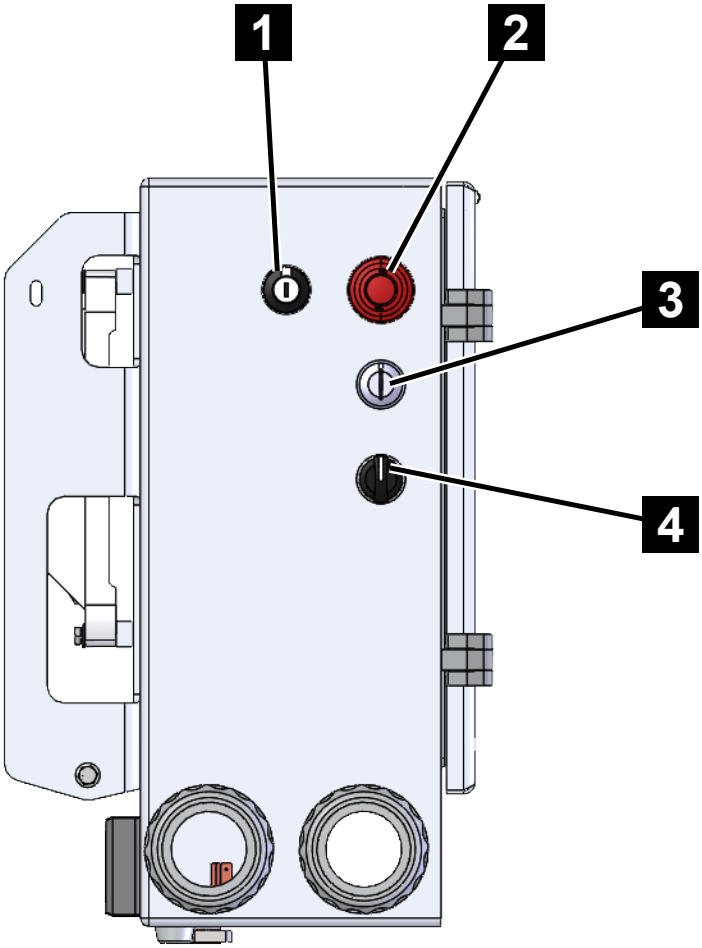

Fig. 35

1 - Key switch Emergency operation display	Switches emergency operation on and off via the display.
2 - Emergency stop button	There is an emergency-stop button on the control box. Once it has been actuated, it must be unlocked by turning it before the machine can be operated again.
3 - Key switch Control on/off	Switches the machine’s control unit on and off.
4 - Toggle switch Secondary control	Switches the secondary control on and off via the display.

4.4.3 Emergency control

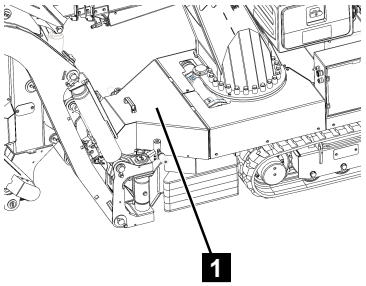

Fig. 36

In the event of a power supply failure, the machine can be operated manually with the help of the valves for boom system or outrigger operation. The valves for outrigger operation and boom system operation are located under the cover (Fig.36/1).

For more information on this process, see the notes and operating procedure for emergency operation (Chapter 6.14 „Emergency operation”, on page 123).

4.5 Electrical connections

4.5.1 Feed

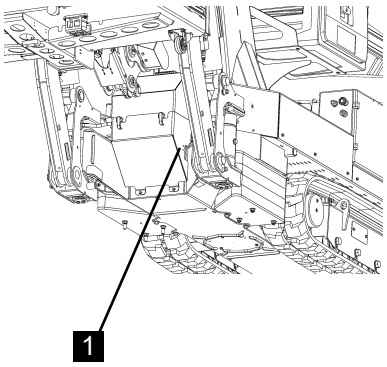

Fig. 37

The electric motor (optional) and the socket in the platform are connected to the construction-site power supply via the socket (Fig.37/1). The maximum power feed is 230 V/16 A, or optionally 400 V/32 A.

The maximum power feed is 230 V/16 A for Europe and 110 V for the USA (optional).

Observe the maximum cable lengths and cable cross-sections.

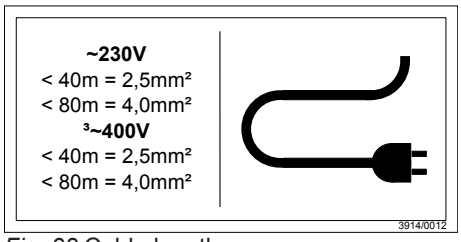

Fig. 38 Cable lengths

4.5.2 Sockets in platform

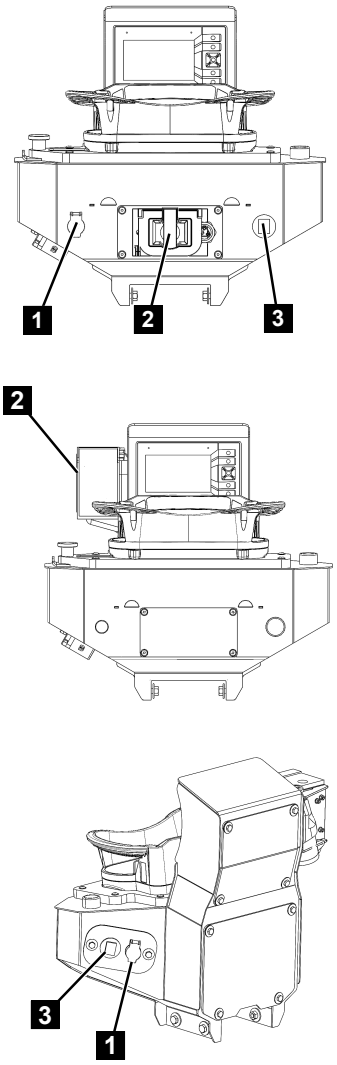

Fig. 39

The maximum electrical connection values of the socket (Fig.39) are 230 V/16 A.

1 – 12 V socket

2 – 230 V socket (country-dependent!)

3 – 5 V USB port

4.6 Work areas and danger zones

The work area and danger zone is within and vertically below the swivel range of the machine.

The work area and danger zone must be blocked off to prevent access by unauthorised persons.

4.7 Description of the workstation

Workstation next to the machine

If the personnel operating the machine are stood next to it, they must maintain a safe distance from the machine in order to ensure that it does not hit them.

They must be able to see the entire machine at all times so that they can spot potential hazards in plenty of time.

Workstation in the platform

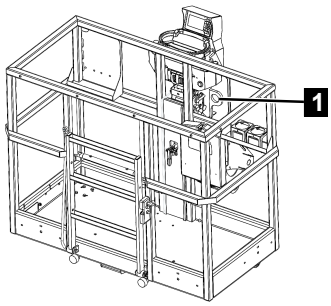

Fig. 40

It must be ensured on the workstation in the platform that personnel are always wearing a safety harness with a restraint system. It must be fastened to the designated attachment point (Fig.40/1).

In case of frost, the floor of the platform must be de-iced.

4.8 Accessories

4.8.1 Accessories (optional)

Safety harness

Wear the safety harness with fall attenuator when performing any work carried out from the working basket. Attach it to the respective fastening points in the working basket.

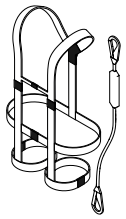

Fig. 41

Battery drive

The combustion engine can optionally be replaced with a battery drive.

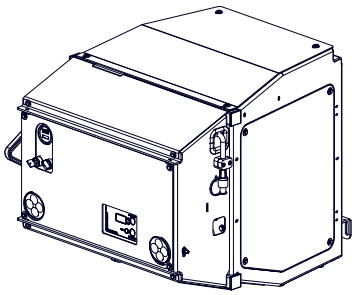

Fig. 42

Combustion engine

The diesel engine can be optionally replaced with a petrol engine.

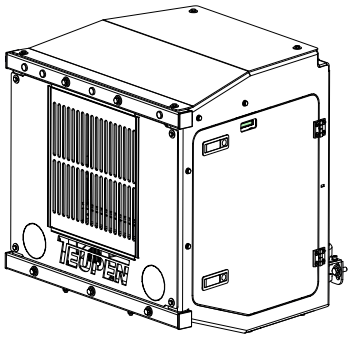

Fig. 43

Slider plates

To prevent damage to the ground or to floors during bracing, slider plates can be fitted to the bracing pads.

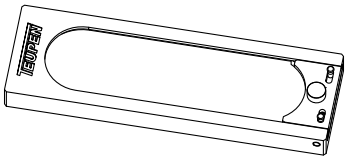

Fig. 44

Spotlights

Spotlights on the drive unit, on the turntable or on the working basket.

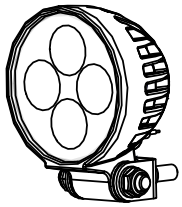

Fig. 45

Trailer

Various trailers for machines weighing up to 3050 kg.

5 Transportation and storage

5.1 Safety instructions for transportation

⚠ WARNING

Risk of fatal injury due to improper transportation

Improper transportation can cause serious or even fatal injuries.

- Keep out of the platform while the aerial access platform is being transported.
- Observe the dimensions of the machine.
- Never stand under or in the swivel range of suspended loads.
- Never move loads without supervision.
- Always use approved load bearing equipment and lifting accessories with sufficient load-bearing capacity.
- Always use the designated attachment points.

5.2 Inspection on receipt of delivery

Inspect the delivery for completeness and transport damage immediately upon receipt.

In the event of externally discernible transport damage, proceed as follows:

- Refuse delivery or accept it under reservation.
- Document the extent of the damage on the transport documents or the transport company's delivery note.
- File a complaint.

NOTICE

Complaint

Report any defect as soon as it is detected. Claims for damages can only be asserted within 12 months after purchase of the machine. Special agreements (e.g. maintenance contract) are possible.

5.3 Attachment points

Transportation by crane

NOTICE

Risk of material damage due to improper fastening!

The use of unsuitable attachment points can cause damage to the machine.

- Only use the attachment points specified here.

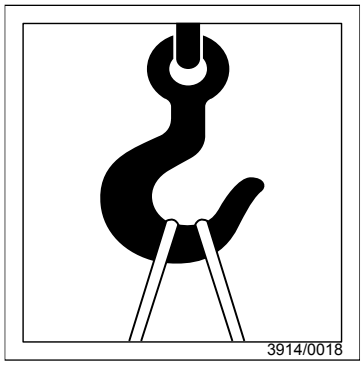

Fig. 46

Crane attachment points:

The crane attachment points are indicated by a crane hook symbol Crane attachment point).

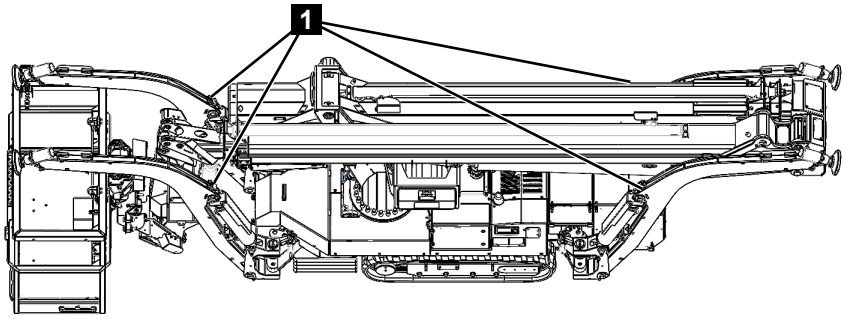

Fig. 47

1	Crane attachment points (on both sides)

Items for transport can be transported with a crane under the following conditions:

- The crane and lifting gear must be designed for the weight of the machine.
- The operator must be authorised to operate the crane.
- The machine must be in the transport position as illustrated.
- Select suitable straps or chains so that the machine can be lifted horizontally.
- The machine must be anchored to the means of transport by lifting accessories connected to the specially provided load blocks (Fig.47/1).

Transportation on a trailer/truck

⚠ WARNING

Risk of injury due to improper conduct when moving the machine

The machine may topple or slip if moved improperly. This can cause severe injuries and significant material damage.

– The incline of the ramps must not exceed the maximum permissible gradeability for the machine.
– During loading, do not stand downhill behind the machine.
– Go up the ramp forwards.
– Do not turn the machine on the ramp or in the loading area.

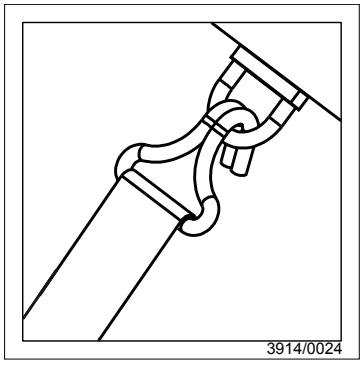

Fig. 48

The attachment points for the lashing eyes are marked as follows:

- Attachment point for transportation on a trailer/truck Lashing eye attachment point).

Lashing eye attachment points:

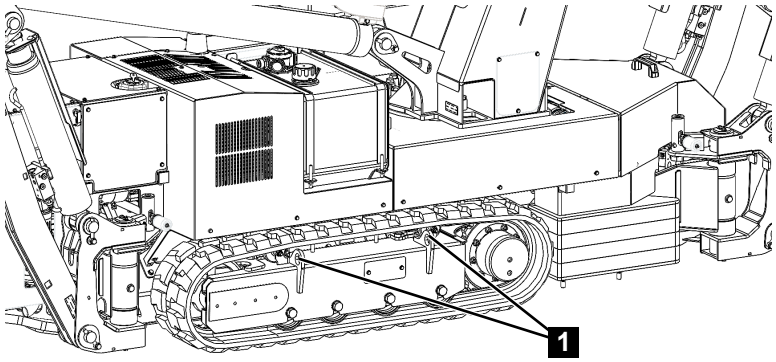

Fig. 49

1	Lashing eye attachment points (both sides)

The machine can be transported on a trailer or truck under the following conditions:

- The trailer or truck must be engineered for the weight and the dimensions of the machine.
- The machine must be in the transport position.
- The machine must be anchored to the means of transport using safety belts or safety chains connected to the specially provided load blocks.

5.4 Storage

Store the machine under the following conditions:

- Do not store outdoors.
- Store dry and dust-free.
- Do not subject to any aggressive media.
- Protect against solar radiation.
- Avoid mechanical shocks.
- Storage temperature: -15 to +40°C.
- Relative humidity: max. 60 %
- Pull out battery cut-off switch or unplug the battery cut-off plug.
- If storing for longer than 3 months, check the condition of all parts regularly. If necessary, freshen or replace the rust-proofing.

CAUTION

Deep-discharging of batteries!

Batteries that are not charged on a regular bases can become deep-discharged and therefore destroyed!

– Check the battery charge level every 2 weeks and recharge them, if necessary.
– For batteries that contain battery fluid, the battery fluid level must be checked and topped up, if necessary.

NOTICE

The duties of the owner applicable in the owner's country must be observed.

6 Operation

6.1 Safety instructions for operation

Improper operation

⚠ WARNING

Risk of injury due to improper operation!

Improper operation can cause severe injuries and significant property damage.

– Carry out all operating steps in accordance with the specifications and notes in these instructions.
– Always perform all work with at least one other person.
– Before beginning any work, ensure that all covers are installed and all safety devices are functioning properly.
– Never disable or bypass safety devices during operation.
– Make sure that there are no people in the danger zone.

6.2 Switching the machine on/off

Personnel:

- Trained personnel

Protective equipment:

- Occupational safety clothing
- Safety shoes
- Safety helmet

Power is supplied either by the mains (construction site feed) using an extension cable, by the combustion engine or by the battery drive.

6.2.1 Connecting the machine to the mains supply

Electric power

⚠ DANGER

Risk to life due to electric current!

Upon contact with voltage-conducting parts, there is an immediate risk to life due to electric shock. Damage to the insulation or individual components can pose a risk of fatal injury.

– In case of damage to the insulation, switch off the voltage supply immediately and have the machine repaired.
– Before performing work on live parts, pull the mains plug.
– Never bypass or disable any fuses or circuit breakers. When changing fuses or circuit breakers, make sure that the ampere rating is correct.
– Keep moisture away from live parts. It may cause a short-circuit.

Connecting the machine to the mains supply

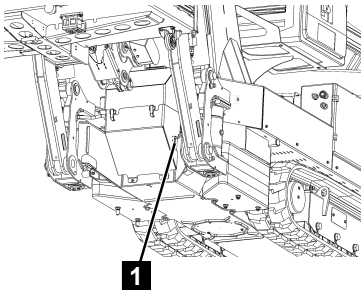

Fig. 50

1. Connect the extension cable to the connector (Fig.50/1). Observe the maximum cable length.

Cable lengths and cross-sections

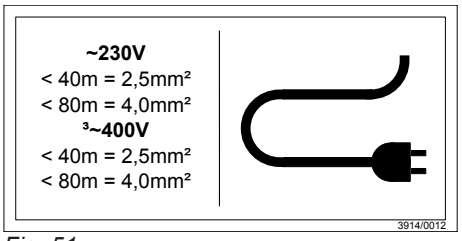

Fig. 51

Disconnecting the machine from the mains supply

2. To disconnect the machine from the mains supply, unplug the extension cable from the connector.

6.2.2 Switching the machine on/off (combustion engine)

Switching on

1. Check the fluid levels of the motor.
2. Check the battery capacity.

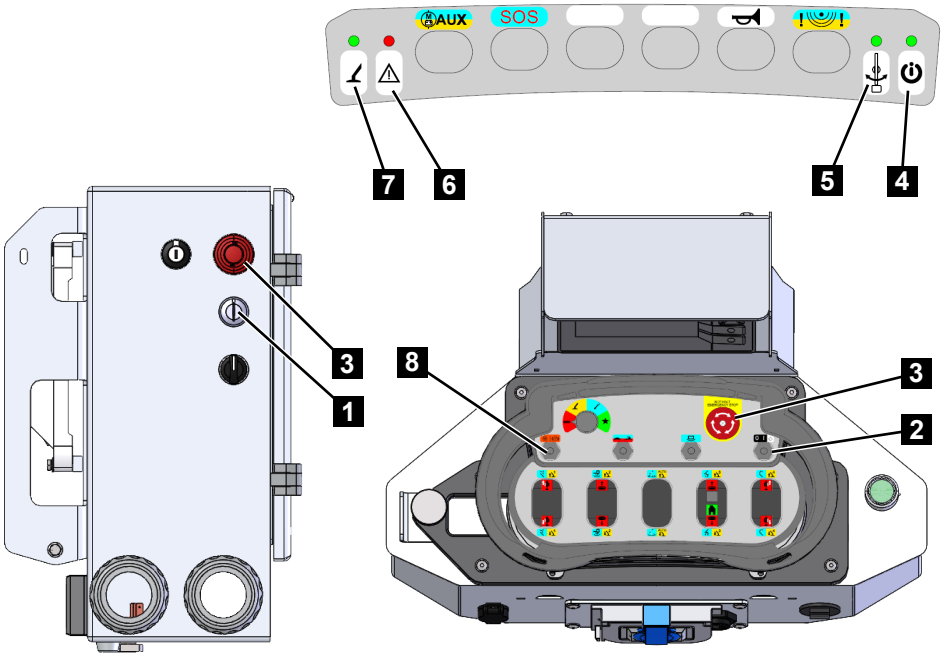

Fig. 52

3. Make sure that the emergency stop button on the control box or radio remote control (Fig.52/3) has not been pressed.
4. To switch on the machine control unit, turn the key switch on the control box (Fig.52/1) to the right.
5. To switch on the radio remote control, switch the switch (Fig.52/2) to |.
   – The light (Fig.52/4) flashes and the lights (Fig.52/5, 6, 7) flash.
6. To pair the radio remote control, switch the switch (Fig.52/2) 1x to the right.
   – The LED in the emergency stop button lights up. The emergency stop button is active.
7. To start the combustion engine, press the button (Fig.52/8) on the remote control to the right and hold it down for at least 2 seconds.
8. To switch off the combustion engine, press the button (Fig.52/8) on the remote control to the left and hold it down for at least 2 seconds.
9. To switch off the radio remote control, push the toggle switch (Fig.52/2) to the left to the 0 position.

NOTICE

After a brief moment, the emergency stop button must remain lit up continuously. If the emergency stop button does not light up, the controller must be examined and the machine must not be used.

NOTICE

If the radio connection is interrupted, the radio remote control must be logged in to the receiver again by pressing the toggle switch (Fig.52/2) to the *[* Start *]* position.

6.2.3 Switching the machine on/off (mains power)

Switching on

1. Connect the machine to the mains supply.

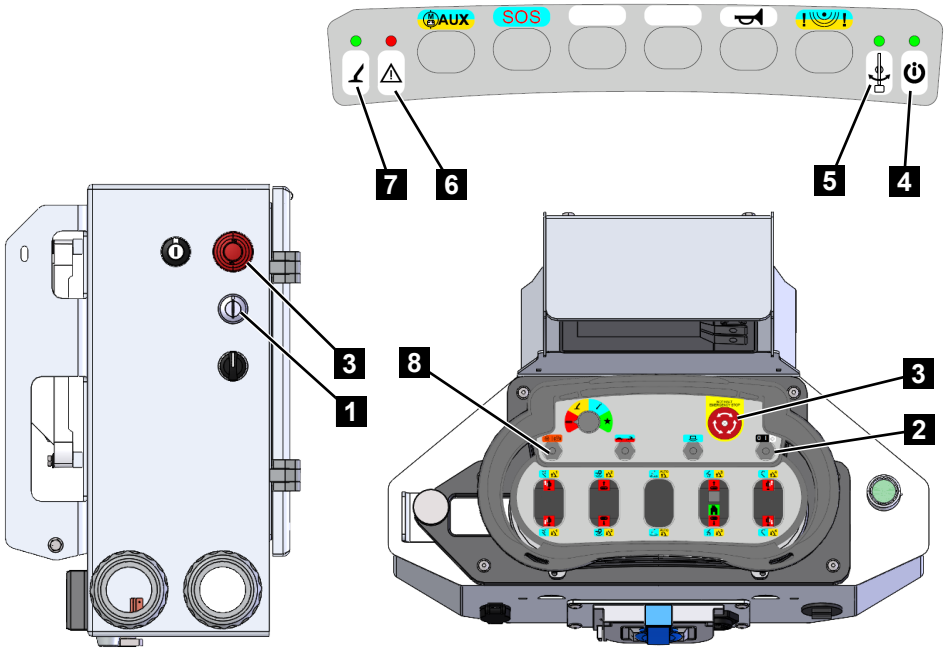

Fig. 53

2. Make sure that the emergency stop buttons on the control box and radio remote control (Fig.53/3) have not been pressed.
3. To switch on the machine control unit, turn the key switch on the control box (Fig.53/1) to the right.
4. To switch on the radio remote control, switch the switch (Fig.53/2) to |.
   – The lamp (Fig.53/4) flashes. The lights (Fig.53/5, 6, 7) flash.
5. To pair the radio remote control, switch the switch (Fig.53/2) 1x to the right.
   – The LED in the emergency stop button lights up. The emergency stop button is active.

NOTICE

After a brief moment, the emergency stop button must remain lit up continuously. If the emergency stop button does not light up, the controller must be examined and the machine must not be used.

Switching off

6. To switch off the radio remote control, push the toggle switch (Fig.53/2) to the left to the 0 position.

NOTICE

If the radio connection is interrupted, the radio remote control must be logged in to the receiver again by pressing the toggle switch (Fig.53/2) to the *[* Start *]* position.

7. To disconnect the machine from the mains supply, unplug the extension cable from the connector.

6.3 Shutting down in case of emergency

In dangerous situations, component movements must be stopped as quickly as possible and the power supply must be shut off.

In case of emergency, proceed as follows:

1. Immediately trigger an emergency stop with the emergency stop device.
2. If there is no risk to your own health, rescue people from the danger zone.
3. Provide first aid as necessary.
4. Alert the fire brigade and/or rescue service.
5. Inform the responsible party at the location of use.
6. Switching off the machine and securing it against restart

6.4 Principles of the graphic display screen

6.4.1 Overview

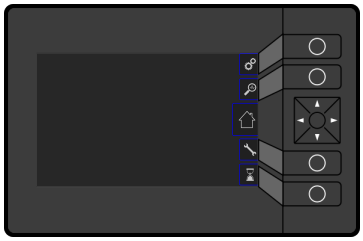

Fig. 54

The graphic display comprises a screen embedded in a frame with push buttons. There are 5 icons on the right-hand side of the screen. These icons change depending on the selected menu. The corresponding push buttons are located to the right of the screen. In the middle is the rocker switch used for navigation and display settings. Above and below the rocker switch, there are two further buttons for confirming the desired icon/menu on the display.

The display also provides information on operating statuses and faults. See:

- Additional machine status information

Overview of display icons

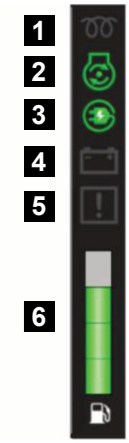

Fig. 55

The status bar on the left side of the operating menu provides information on the following properties:

1. Engine preheating status (grey: inactive / yellow: active)

2. Engine running status (grey: inactive / green: active)

3. 230 V supply status (grey: inactive / green: active)

4. Battery voltage status (grey: inactive / red: U <= 11.4 V / yellow: U > 11.4 V / green: U > 11.8 V)

5. Information message present (lights up yellow when the information message has been acknowledged and hidden)

6. Display of fuel tank capacity in diesel tank

The icons on the right of the screen lead to the following menus:

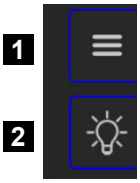

Fig. 56

1. Menu
2. Lighting

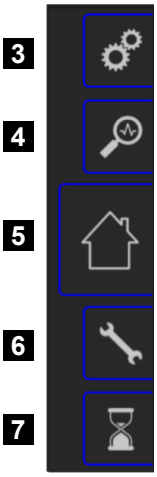

Fig. 57

3. Settings
4. Diagnostics
5. Home (back to main menu)
6. Service
7. Operating hours counter

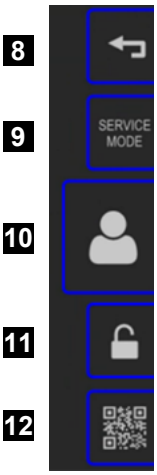

Fig. 58

8. Back
9. Service mode
10. Login service
11. Login one-time code
12. View QR code

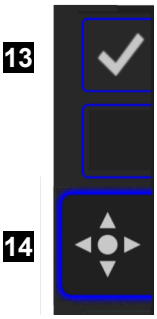

Fig. 59

13. Acknowledgement
14. Rocker switch for navigation/settings on the display

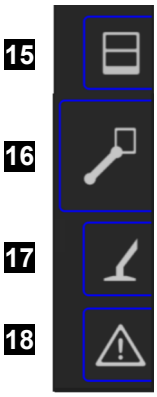

Fig. 60

15. Platform
16. Boom system
17. Outriggers
18. Error display

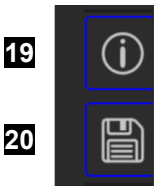

Fig. 61

19. Information
20. Saving settings

6.4.2 Examples of operating modes

6.4.2.1 Crawler function

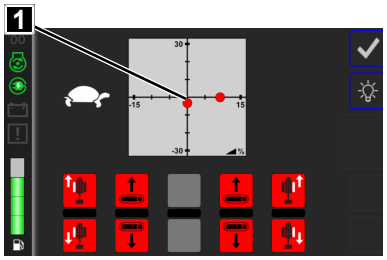

Fig. 62

In crawler function mode, the red dot (Fig.62/1) on the coordinate axes indicates the horizontal and vertical incline of the machine.

6.4.2.2 Outrigger function

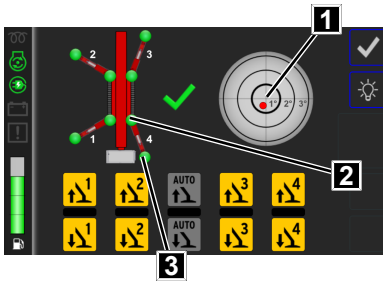

Fig. 63

Position	Meaning
1	Circular level
2	Outrigger locking mechanism
3	Floor pressure

In outrigger function mode, the display shows the alignment of the individual outriggers and their correct stabilisation.

In this example:

Narrow-wide support, correctly levelled out (Fig.63/1), outriggers locked (Fig.63/2), floor pressure sufficient (Fig.63/3). A tick is shown to indicate when the stabilisation is correct.

6.4.2.3 Platform function

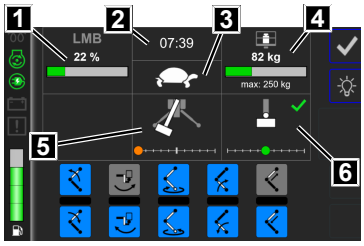

Fig. 64

In the boom function mode, the upper part of the display provides information about the following properties:

1 Load torque limitation

2 Current time

3 Reduced speed

4 Current load capacity

5 Boom alignment

6 Platform alignment

Boom system operation
End of movement

The 10 pictograms at the bottom of the screen show all the movements that can currently be executed using the operating lever. The coloured bar between the pictograms indicates how far the respective movement is from the end stop. Orange means: movement in this direction still possible. Red means: end stop reached.

When the end stop is reached, a warning message also appears at the top of the display.

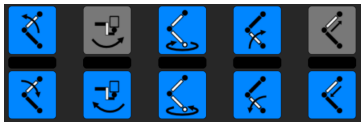

End of movement swivel left 0% reached

Fig. 65



End of movement swivel left 40% reached

Fig. 66

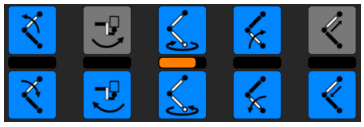

End of movement swivel left 80% reached

Fig. 67

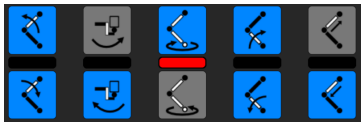

End of movement swivel left 100% reached

Fig. 68

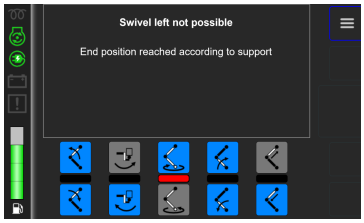

Warning: End of movement swivel left reached

Fig. 69

6.4.3 Main menu

NOTICE

Press the top button to access the ”main menu”.



Fig. 70

The ”main menu” refers to 4 submenus:

- Settings
- Diagnostics
- Service
- Operating hours counter

6.4.3.1 Settings

Password protection

You will need to enter a password to access the *“Settings”* menu.

NOTICE

The default password on delivery is: 2468

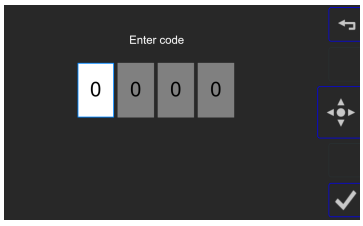

Fig. 71

NOTICE

If the password is entered incorrectly, this is shown on the display and the password can be re-entered

Settings menu

Use the rocker switch to navigate until the white frame is positioned over the desired menu item and then confirm.

The settings menu comprises 4 submenus:

- “Display”
- “Date/Time“
- Language
- ”Automatic mode jib”

Display settings

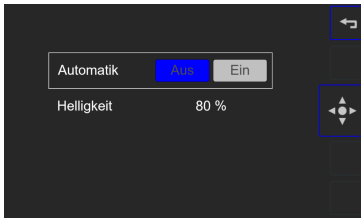

Fig. 72

In the “Display settings” menu, you can adjust the following settings:

- Automatic on/off (set to ”off” here).
  When set to ”on”, the display brightness is automatically controlled by the light sensor.
  This sensor is located in the upper left corner of the display.
- Brightness in %

Time settings



Fig. 73

In the “Time settings” menu, you can adjust the following settings:

- Day
- Month
- Year
- Hour
- Minute

Setting the language

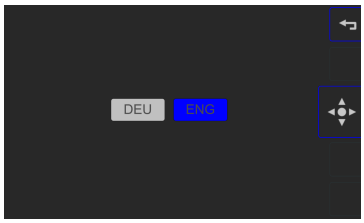

Fig. 74

Four languages are available: German, English, French and Dutch.

Set automatic mode

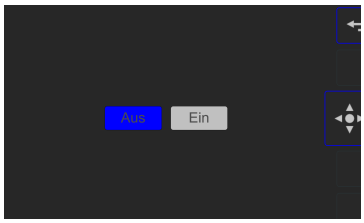

Fig. 75

Switch platform automatic mode off/on

6.4.3.2 Diagnostic menu

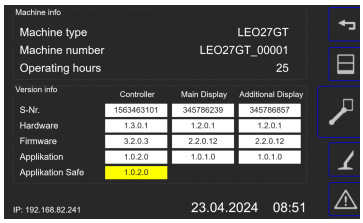

Fig. 76

The ”Machine info” menu provides information on the following specifications:

- Machine type
- Serial number
- Operating hours
- Hardware and software versions

Boom system diagnostics

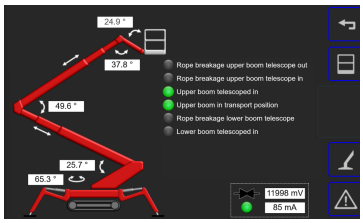

Fig. 77

The boom system diagnostics provides a visual display of current information about the boom system.

- Rope break upper boom telescope in/out
- Upper boom telescoped in/out
- Upper boom lowered
- Lower boom retracted
- Current sensor values
- Status of boom system release valve output

Platform diagnostics

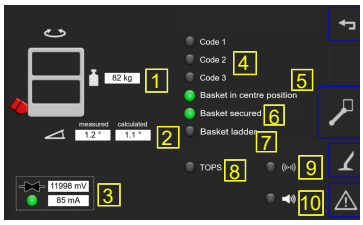

Fig. 78

The platform diagnostics provides a visual display of current information about the sensors and actuators for the platform.

1. Current weight in platform
2. Platform inclination measured by the platform inclination sensor and calculated from the sensors of the boom system
3. Status of platform release valve output with current voltage and current
4. Status of inputs for platform coding
5. Status of platform centre position sensor
6. Status of platform locking sensor
7. Status of platform ladder closed sensor
8. Status of TOPS (TEUPEN Operator Protection System) triggered
9. Status of TOPS warning signal output
10. Status of buzzer output

Outrigger diagnostics

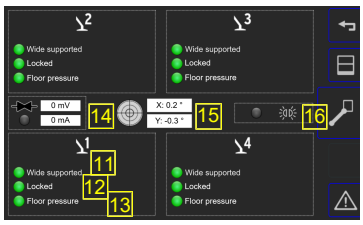

Fig. 79

The outrigger diagnostics provides a visual display of current information about the sensors for the outrigger.

11. Status of input for outrigger 1 in “wide” position
12. Status of input for outrigger 1 locked
13. Status of input for outrigger 1 floor pressure
14. Status of output for outrigger release valve with current voltage and current
15. Sensor values for chassis inclination in X and Y direction
16. Status of output of warning lights on the outriggers

Error diagnostics

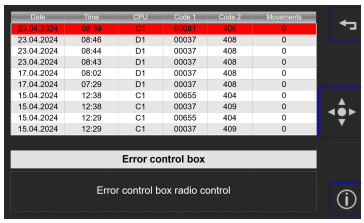

Fig. 80

The error diagnostics provides a visual display of the contents of the error memory. The respective list entry is selected using the rocker switch. A text display with the description of the selected error code appears in the lower fields. Additional information can be displayed using the Info button.



Fig. 81

Boom system operation errors

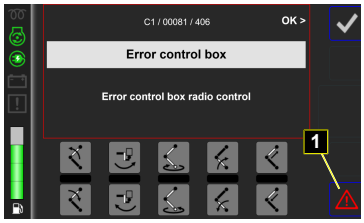

Fig. 82

The “Control stand error” message indicates a fault between the control unit and the machine. Press the button (Fig.82/1) to go to the detailed error description.

Fault description



Fig. 83

The error description specifies the cause of the error and troubleshooting options.

Use the arrow (Fig.83/1) to return to the main screen.

Press SOS (Fig.83/2) to activate emergency operation.

Press RESET (Fig.83/3) to reset the control unit.

6.4.3.3 Service menu



Fig. 84

The service hotline and QR code can be found under the service menu.

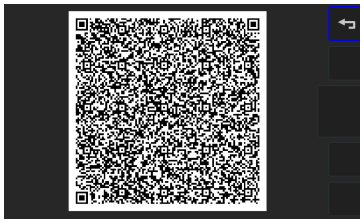

Display QR code

Fig. 85

6.4.4 Special menu

NOTICE

The control panel (set the function selection button to green) takes you to the special menu.

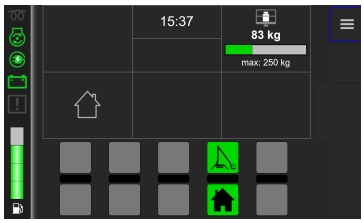

Fig. 86

The special menu displays the following data:

- Current time
- Current load of the platform
- Boom system in working position
- Boom system in transport position

6.4.5 Additional machine status information

The following information messages may be displayed during operation:

Communication errors



Fig. 87

- No communication between display and control unit.
  - Check communication channels.

Activate radio remote control



Fig. 88

- Operation via remote control not possible.
  - Activate radio remote control.

Cut-off Emergency stop radio remote control



Fig. 89

- The emergency stop function of the radio remote control has been activated.

Cut-off Emergency stop chassis



Fig. 90

- The emergency stop function of the chassis has been activated.

Cut-off Overload



Fig. 91

- The maximum load capacity has been exceeded.
  - Reduce the load.

Refuelling required



Fig. 92

- The machine is running out of fuel.
  - Refuel at the next opportunity.

Warning Charge battery

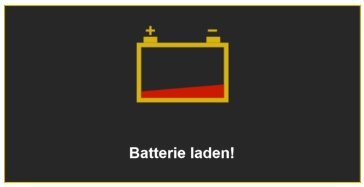

Fig. 93

- Low energy.
  - Charge the battery at the next opportunity.

Check oil level



Fig. 94

- The oil level is insufficient.
  - Top up oil.

Warning
Cooling water temperature



Fig. 95

- The cooling water temperature is too high.
  - Cancel operation and continue later.

Cut-off
Platform ladder open



Fig. 96

- The platform ladder is open.
  - Close the platform ladder to continue.

Cut-off
Foot switch not pressed



Fig. 97

- The foot switch is not pressed.
  - Press the foot switch to continue.

Cut-off
TOPS triggered



Fig. 98

- TOPS has been triggered. (TEUPEN Operator Protection System) (↳Chapter 10.5.2 „TEUPEN operator protection system”, on page 235)

Supply
Check electric motor

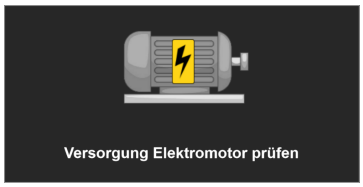

Fig. 99

- The power supply is not guaranteed.
  - Check the electric motor.

Safety systems inactive



Fig. 100

- The safety systems are not active.
  - Activate the safety systems to continue.

Emergency stop / Activation



Fig. 101

- The emergency stop function has been activated.
  - Unlock the emergency stop button on the radio remote control and activate the radio remote control.

Press dead man switch

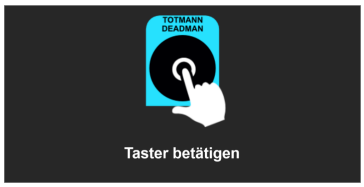

Fig. 102

- Dead man switch has not been pressed.
  - Press the dead man switch.

Control panel not in holder



Fig. 103

- The control panel is not in its holder.

Warning Oil temperature



Fig. 104

- The oil temperature is too high.
  - Check the oil level.

Warning Check alternator



Fig. 105

- The alternator is not working properly.
  - Check alternator.

Warning Recirculation filter clogged



Fig. 106

- The recirculation filter is clogged.
  - Clean the recirculation filter.

Warning
Touchdown protection triggered



Fig. 107

- The touchdown protection has been triggered.
  - Check the platform height.

Warning
Pressure filter clogged



Fig. 108

- The pressure filter is clogged.
  - Clean the pressure filter.

Warning
Replace battery for radio transmitter



Fig. 109

- The rechargeable battery for the radio transmitter is empty.
  - Replace the battery for the radio transmitter.

6.5 Moving the machine

Personnel:

- Trained persons

Protective equipment:

- Protective work clothing
- Safety boots
- Protective helmet
- Safety harness

⚠ WARNING

Risk of injury due to improper conduct when moving the machine!

The machine may topple or slip if moved improperly. This can cause severe injuries and significant material damage.

- Only move the machine in the transport position.
- When driving the machine from inside the platform, wear a safety harness fastened to the fastening points in the platform.
- Beware of the openings in the ground when driving.
- Do not drive over materials with sharp edges.
- Do not make any abrupt changes of direction.
- When stopping on a slope, secure the machine against rolling away.
- Make sure that the ladder is folded up and locked.
- When the machine is driving across an incline, do not stand downhill of the machine.
- When the machine is driving up an incline, keep clear of the area behind the machine.
- Only go up slopes by moving forwards.
- Only go down slopes by moving backwards.
- Prevent the crawler tracks from coming into contact with oil, petrol, diesel and salt. Clean them afterwards as necessary.

6.5.1 Moving the machine using radio remote control

1. Switch on the machine.
   (↳Chapter 6.2 „Switching the machine on/off”, on page 69).

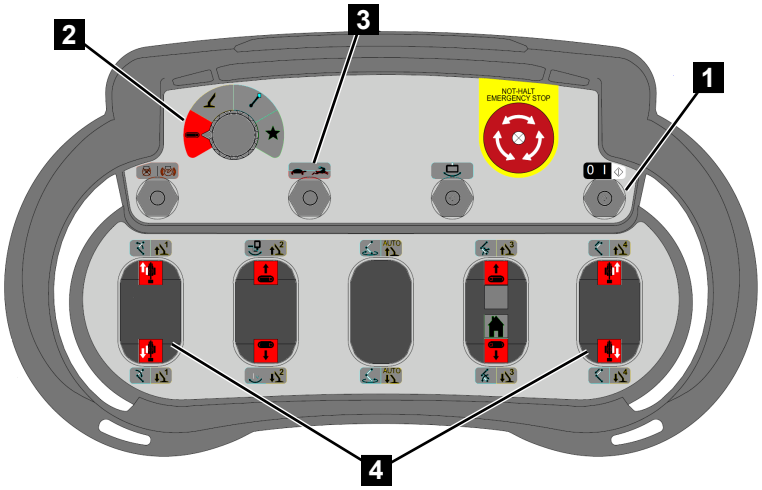

Fig. 110

2. Set the function selection switch to *[crawler function]* (red) (Fig.110/2).
3. Use the mode selector (Fig.110/3) to select the speed: *[crawl speed]* or *[fast speed]*.
4. Use the control levers (Fig.110/4) to move the machine as indicated in the following table.

NOTICE

You can adjust the travel speed by moving the control levers slowly.

Since the crawl speed has the most force and power, we recommend using it on tight turning radius.

⚠ WARNING

Risk of injury if the speed is not adjusted on slopes or inclines!

If the speed of the machine is not adjusted when driving over slopes or inclines, it may topple or slip. This can cause severe or even fatal injuries and significant material damage.

– When on slopes or inclines, drive machine only at crawl speed.

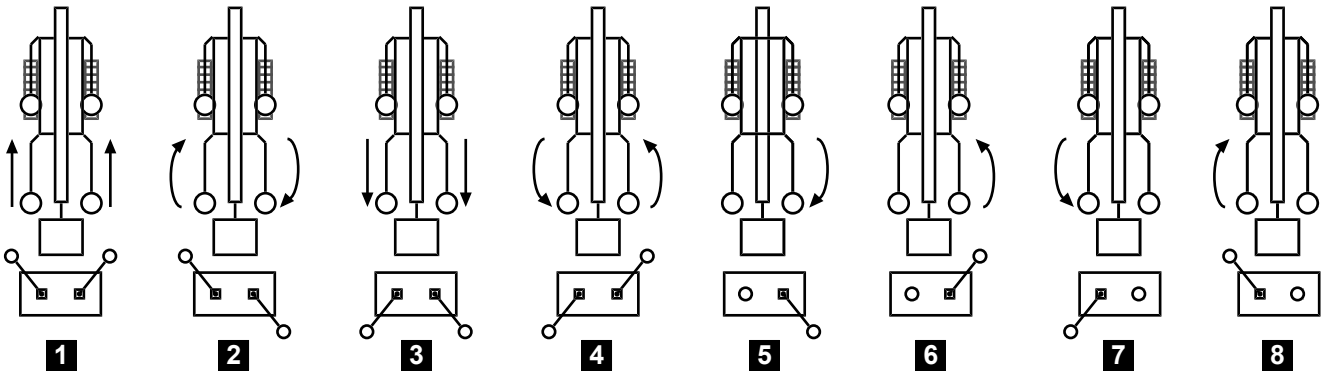

Fig. 111

No.	Operation	Effect
1	Push both control levers forwards.	The machine travels forwards.
2	Push the left-hand control lever forwards and pull the right-hand control lever back.	The machine turns clockwise on the spot.
3	Pull both control levers back.	The machine reverses.
4	Pull the left-hand control lever back and push the right-hand control lever forwards.	The machine turns anti-clockwise on the spot.
5	Pull back only the right-hand control lever.	The machine reverses and turns clockwise.
6	Push forward only the right-hand control lever.	The machine travels forwards and turns anti-clockwise.
7	Pull back only the left-hand control lever.	The machine reverses and turns anti-clockwise.
8	Push forward only the left-hand control lever.	Machine turns forwards in clockwise direction.

NOTICE

Depending on the conditions of the ground, the possible turning circle may vary in size. Small turning circles subject the crawler track to higher levels of strain and cause it to wear out more quickly.

6.5.2 Driving the machine along a slope

⚠ WARNING

Risk of injury due to improper operation!

The machine may topple or slip if driven improperly.

- Remaining in the working basket when the machine is driving on a slope is prohibited.
- Observe the maximum permissible incline of the machine.
- Never stand below the machine on an incline.

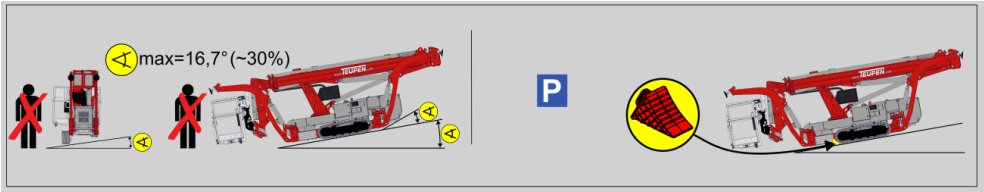

Fig. 112

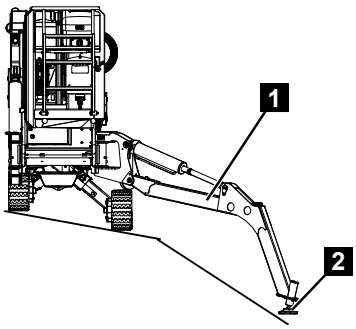

Fig. 113

1. Align the machine using the crawler chassis. (↳Chapter 4.3.1 „Crawler chassis”, on page 50) Observe the machine’s maximum tilt angle when doing so.
2. For safety, set one outrigger on the slope side (Fig.113/1) to the wide bracing variant.
3. Manually lower the desired outrigger and ensure that the bracing pad (Fig.113/2) does not touch the ground, .

6.5.3 Driving the machine up inclines

⚠ WARNING

Risk of fatal injury due to incorrect operation

The machine may topple if driven over excessively high height differences. This can cause serious or even fatal injuries.

- Remaining in the working basket when the machine is up or down an incline is prohibited.
- Never stand in the danger zone (toppling range) of the machine.
- Observe the machine's maximum tilt angle.
- Always approach ridges at a right angle.

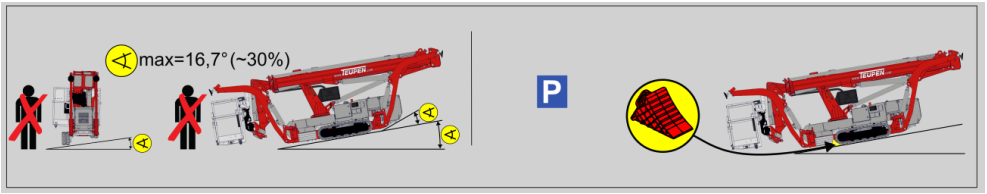

Fig. 114

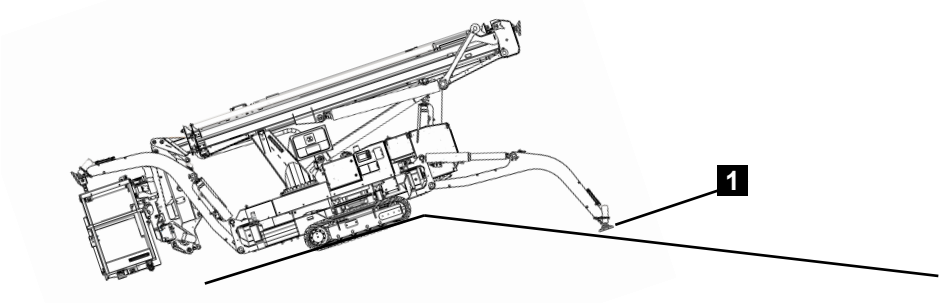

Fig. 115

1. Fully retract the crawler chassis. (↳Chapter 6.6 „Crawler chassis, height- and width-adjustable", on page 95).
2. To keep the machine safe and stable, move outrigger 2 or 3 (Fig.115/1) into the wide or narrow stabilisation position.
3. Lower the outrigger in question manually, making sure that the outrigger pad remains just above the ground .

6.6 Crawler chassis, height- and width-adjustable

The height, and thus the width too, of the two crawler chassis can be adjusted independently. This function is required primarily when driving along slopes. Adjustment is performed hydraulically.

6.6.1 Hydraulic crawler adjustment

Personnel:

- Trained persons

Protective equipment:

- Protective work clothing
- Safety boots
- Protective helmet

⚠ WARNING

Risk of injury due to improper height/width adjustment!

The machine may topple or slip if height and width adjustments are made improperly. This can cause severe injuries and significant material damage.

– Observe the machine's maximum tilt angle.
– Always keep clear of the down slope side of the machine.
– Make sure that the area beside the machine is clear of people.

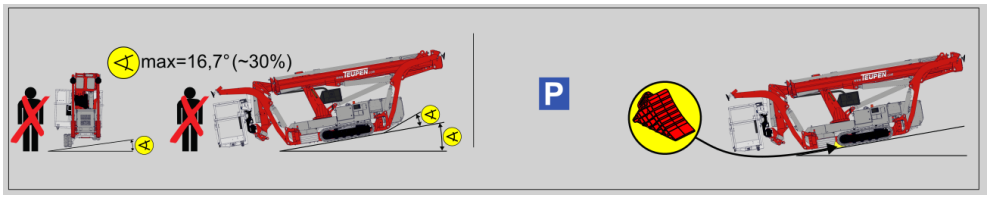

Fig. 116

6.6.1.1 Extending and retracting the crawler chassis hydraulically

1. Switch on the machine.
   (↳Chapter 6.2 „Switching the machine on/off", on page 69).

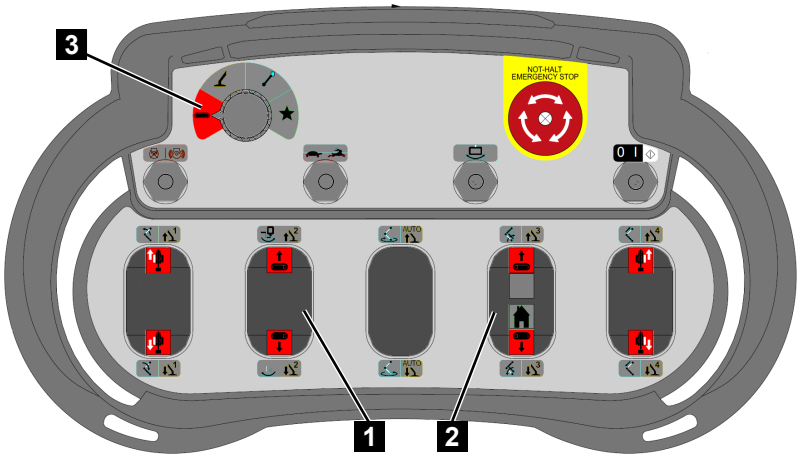

Fig. 117

2. Set the function selection switch on the control unit to *[crawler function]* (red) (Fig.117/3).
3. Use the control levers (Fig.117/1 and 2) to operate the crawler chassis as per the following table.

NOTICE

Make sure that there are no obstacles (kerbs, etc.) beside the machine, as they may obstruct the movement of the chassis.

Control lever	Symbol	
Control lever (Fig.117/1)		Left crawler chassis extends
		The left-hand crawler chassis is retracted
Control lever (Fig.117/2)		Right crawler chassis extends
		The right-hand crawler chassis is retracted

6.6.2 Tips and recommendations for adjusting the crawler chassis hydraulically

In the following you will find useful tips for adjusting the crawler chassis:

- The hydraulic adjustment mechanism is designed for adjusting the height and width of the chassis without having to raise the chassis with the outriggers.
- If the chassis cannot be adjusted because of unfavourable ground conditions, the bracing system will have to be used.
- The hydraulic adjustment power is limited in order to protect the machine and the crawler chassis. On a solid surface, such as pavement, asphalt, compressed gravel or firm turf, the crawler tracks can be moved up, down and sideways either on both sides at once or individually.
- On a sandy surface or soft grass, the crawler tracks may get stuck in the ground in a certain position, especially after extending and retracting several times.
- If the ground is not particularly hard, we recommend making the desired chassis adjustment beforehand on a solid surface or by using the bracing system to raise the chassis in advance.

6.7 Removing/mounting the working basket

Personnel:

- Trained persons

Protective equipment:

- Occupational safety clothing
- Safety boots
- Safety helmet

When traversing narrow passages or when mounting a lifting device, the working basket needs to be removed and mounted again. The linkage platform features a changing mechanism for this purpose.

NOTICE

Always engage a second person to help change the working basket.

Use only platform approved by the manufacturer.

6.7.1 Removing the working basket

1. Move the boom system into transport position.
2. Remove the plug (Fig.118/1) from the control panel.

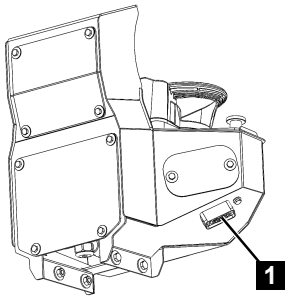

Fig. 118

3. 2nd person: Support the platform from below (Fig.119/1).

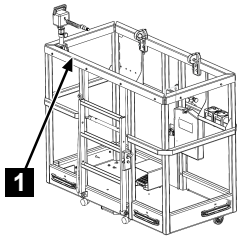

Fig. 119

4. Pull the spring cotter pin (Fig.120/1) out of the platform bolt.

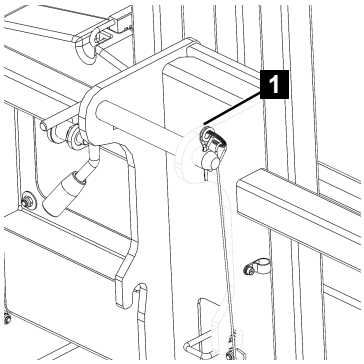

Fig. 120

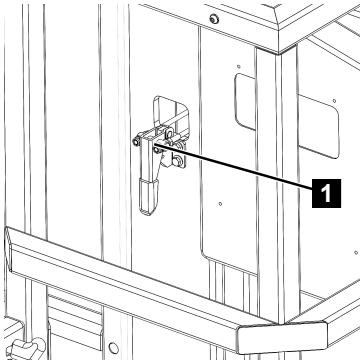

Fig. 121

5. Release the tension on the clamping element (Fig.121/1) by pulling it up and releasing the shackle.

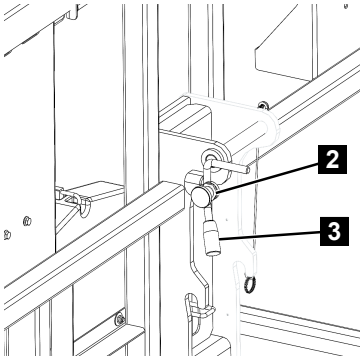

Fig. 122

6. Unlock the latch (Fig.122/2) by pulling and turn the locking bolt 90°.
7. Pull out the locking bolt (Fig.122/3).

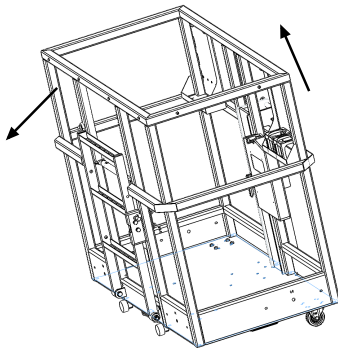

Fig. 123

8. Working as a pair, tilt the platform downwards slightly and pull it out of the holder.

6.7.2 Installing the working basket

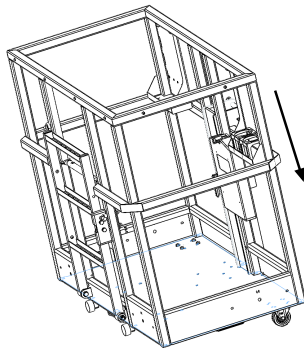

Fig. 124

1. The platform must be in transport position or working position.
2. Working as a pair, insert the platform (Fig.124) into the holder and press into the mount.

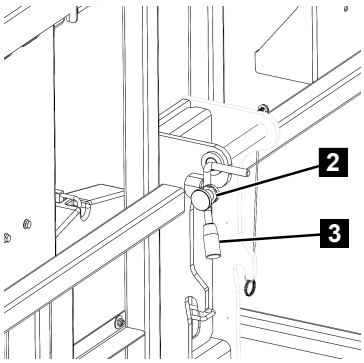

Fig. 125

3. Insert the locking bolt (Fig.125/3).
4. Turn the locking bolt 90° and lock the latch (Fig.125/2) by pressing it.

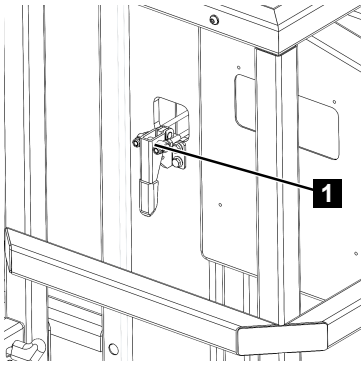

Fig. 126

5. Press the clamping element (Fig.126/1) downwards.

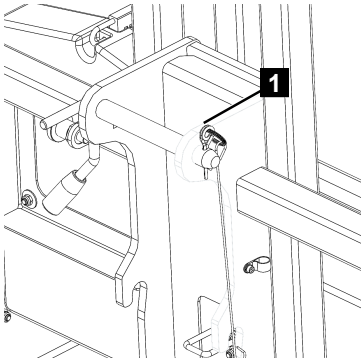

Fig. 127

6. Insert the spring cotter pin into the locking pin (Fig.127/1).

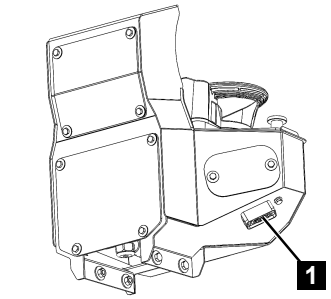

Fig. 128

7. Reconnect the plug (Fig.128/1) to the control panel.

6.8 Operating the bracing

Personnel:

- Trained person

Protective equipment:

- Protective work clothing
- Safety boots
- Protective helmet

⚠ WARNING

Risk of injury due to improper bracing!

The machine may topple or slip if it is braced improperly. This can cause severe injuries and significant material damage.

– Always perform all work with at least one other person.
– Make sure that the ground has sufficient load bearing capacity.
– Always use base plates.
– Observe the maximum permissible ground inclination.
– Ensure that the base plates are horizontally aligned (maximum deviation of 8°).
– Secure the machine on a slope to prevent slipping. Use attachment points on the chassis! The outriggers must not be anchored using chains, ropes, ground nails, etc.
– Always observe the movement of the outriggers when extending.
– Make sure that no people, supply lines or other objects are in the area around the outriggers.
– Extend the outriggers in the transport position carefully and with caution. There is a risk of collision with other parts of the machine!

In order to put the machine into the working position, the outriggers can be extended manually or automatically. The machine can be stabilised using the radio remote control.

6.8.1 Moving the bracing into the work position

Stabilisation variants

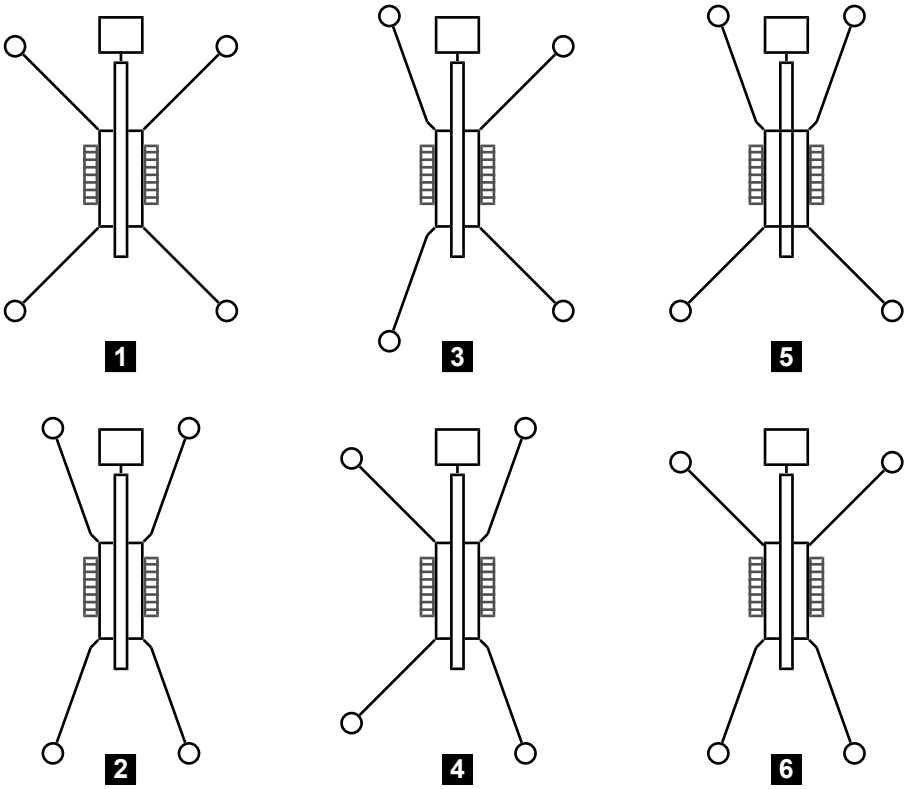

Fig. 129

No.	Stabilisation variants
1	Wide
2	Narrow
3	Narrow – Wide
4	Wide – Narrow
5	Front narrow – Back wide
6	Back narrow – Front wide

6.8.1.1 Adjusting the bracing

Personnel:

- Trained persons

Protective equipment:

- Protective work clothing
- Safety boots
- Protective helmet

⚠ WARNING

Risk of injury due to improper bracing!

The machine may topple or slip if it is braced improperly. This can cause severe injuries and significant material damage.

– Always perform all work with at least one other person.
– Make sure that the ground has sufficient load bearing capacity.
– Always use base plates.
– Observe the maximum permissible ground inclination.
– Ensure that the base plates are horizontally aligned (maximum deviation of 8°).
– Secure the machine on a slope to prevent slipping. Use attachment points on the chassis! The outriggers must not be anchored using chains, ropes, ground nails, etc.
– Always observe the movement of the outriggers when extending.
– Make sure that no people, supply lines or other objects are in the area around the outriggers.
– Extend the outriggers in the transport position carefully and with caution. There is a risk of collision with other parts of the machine!

The individual outriggers can in each case be locked in two work positions (narrow and wide). The adjustment procedure is described in the following using outrigger 1 as an example.

⚠ WARNING

Risk of crushing!

When unfastening the outrigger, there is a risk of crushing if an outrigger is allowed to pivot in an uncontrolled manner.

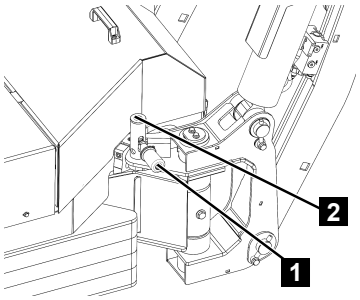

Fig. 130

1. Secure the outrigger with one hand.
2. Use your free hand to unlock the locking bolt by pulling on the handle (Fig.130/1) and pull it up along the link (Fig.130/2) until the outrigger can be pivoted freely.

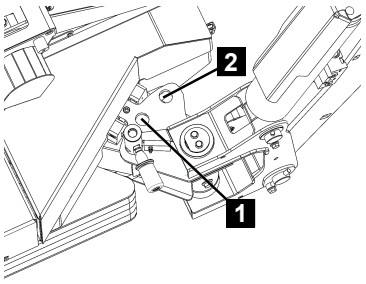

Fig. 131

3. Pivot out the outrigger until the locking bolt is located over the drill hole for the narrow (Fig.131/1) or wide (Fig.131/2) work position.
4. Push the locking bolt on the handle bar down along the link. Check that the locking bolt is fully pressed in and the locking mechanism is engaged.

6.8.2 Manual bracing

1. Switch on the machine(↳Chapter 6.2 „Switching the machine on/off”, on page 69).
2. Put the outriggers in the desired working position (↳Chapter 6.8.1 „Moving the bracing into the work position”, on page 102).

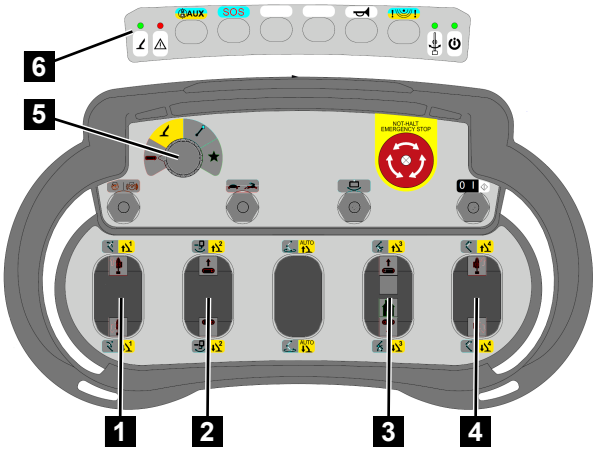

Fig. 132

3. Set the function selector to *[outrigger function]* (yellow) (Fig.132/5).

⚠ WARNING

Risk of injury due to machine listing when lifting or lowering

Due to uneven lifting and lowering, the machine can tip or slide. This can cause severe injuries and significant material damage.

– If the machine begins to list during lifting or lowering, immediately stop the process and realign the machine manually.

4. Using the control levers (Fig.132/1, 2, 3 and 4), move the desired outrigger(s) according to the table below.
5. If the stabilisation is correct, the green lamp (Fig.132/6) will light up continuously.

Operating element	Symbol	Effect
Control lever (Fig.132/1)		Outrigger 1 extends
		Outrigger 1 retracts
Control lever (Fig.132/2)		Outrigger 2 extends
		Outrigger 2 retracts
Control lever (Fig.132/3)		Outrigger 3 extends
		Outrigger 3 retracts
Control lever (Fig.132/4)		Outrigger 4 extends
		Outrigger 4 retracts

6.8.3 Automatic bracing

1. Switch on the machine (↳Chapter 6.2 „Switching the machine on/off”, on page 69).
2. Put the outriggers in the desired working position (↳Chapter 6.8.1 „Moving the bracing into the work position”, on page 102).

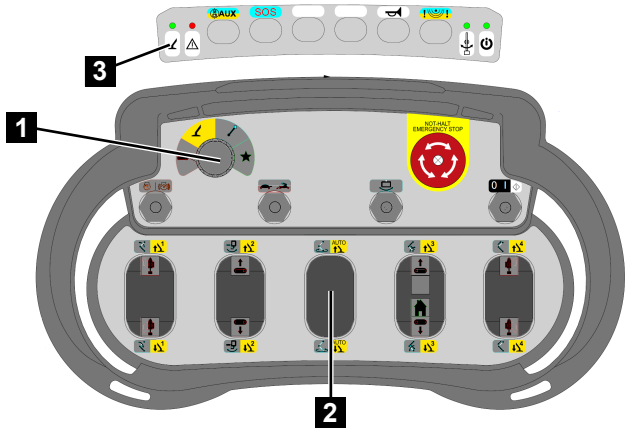

Fig. 133

3. Set the function selector to *[outrigger function]* (yellow) (Fig.133/1).

⚠ WARNING

Risk of injury due to machine listing when lifting or lowering

Due to uneven lifting and lowering, the machine can tip or slide. This can cause severe injuries and significant material damage.

– If the machine begins to list during lifting or lowering, immediately stop the process and realign the machine manually.

4. With the middle control lever [2], operate all outriggers simultaneously.
5. If the stabilisation is correct, the green lamp (Fig.133/3) will light up continuously.

Operating element	Symbol	Effect
Control lever (Fig.133/2)		Outriggers 1, 2, 3 and 4 extend
		Outriggers 1, 2, 3 and 4 retract

6.9 Operating the boom system

6.9.1 Operating the platform assembly

Personnel:

- Trained persons

Protective equipment:

- Occupational safety clothing
- Safety boots
- Safety helmet
- Safety harness

⚠ WARNING

Risk of injury due to improper operation!

Improper operation can cause severe injuries and significant property damage.

– Always put the safety harness on and hook it into the fastening points when in the working basket.
– Do not swing or make sudden movements in the working basket.
– Always perform any work with the help of at least one other person, with one person remaining on the ground at all times so that they can actuate the emergency control if necessary.
– Make sure that the ladder is folded up and locked.
– Do not climb onto the safety fence around the basket.
– The lifted working basket must not be entered or exited. This is only permitted in the transport position.
– Do not work on or near high-voltage lines.
– Never overload the working basket. The maximum basket load is specified on the working basket.
– Beware of high obstacles. Prevent collision with fixed (building structures, etc.) or moving objects (vehicles, cranes, etc.).
– When moving the working basket, make sure that there is no risk of body parts getting pinched, e.g. between the crane assembly and a wall.
– Persons standing in the working basket who are not operating the machine must ensure that no entrapment or crushing injuries can occur during machine movements.
– If the wind speed exceeds 12.5 m/s (wind strength 6 Bft), cease work immediately.

⚠ WARNING

Emergency operation out of order!

If the starter battery or the battery for the machine battery drive is not charged sufficiently, emergency operation will no longer be possible.

- The main battery must be recharged before any carrying out any platform functions.
- Never begin platform operation if the battery is not fully charged.
- Operation with an insufficiently charged battery is prohibited.
- If the display on the control panel shows the instruction “Charge battery”, work must be interrupted. It will only be possible to move the machine towards the transport position. Once this position is reached, the battery must be charged in order to continue running the boom system.

1. Check the battery charge.

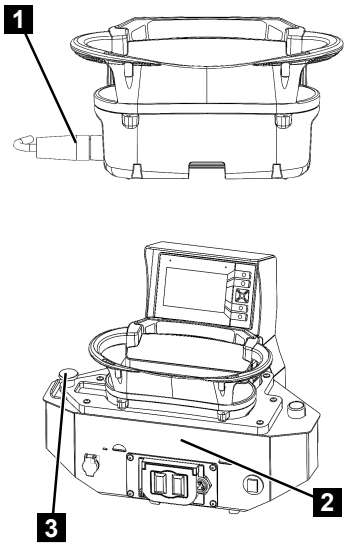

Fig. 134

2. Optionally connect the cable (Fig.134/1) to the control panel.
3. Insert the radio remote control into the control panel (Fig.134/2).
4. To lock, push the arrestor (Fig.134/3) to the right, the toggle will engage.

Operating the boom system

5. Switch on the machine (Chapter 6.2 „Switching the machine on/off", on page 69).

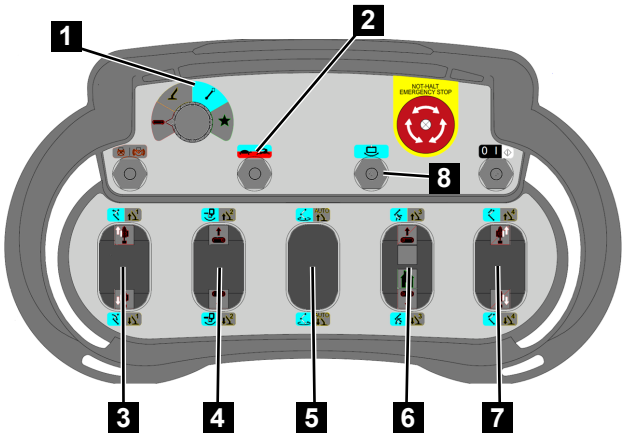

Fig. 135

6. Set the function selection switch on the control unit to *[boom function]* (blue) (Fig.135/1).
7. Use the mode selector to select the speed: *[crawl speed]* (Fig.135/2) or *[fast speed]* (Fig.135/2).

8. Use the control levers (Fig.135/3, 4, 5, 6, 7 and 8) to operate the boom system as per the table below.

Operating element	Symbol	Effect
Control lever (Fig.135/6)		Raises the lower boom Telescopes out the lower boom
		Lowers the lower boom Telescopes in the lower boom
Control lever (Fig.135/3)		Raises the upper boom
		Lowers the upper boom
Control lever (Fig.135/7)		Telescopes out the upper boom
		Telescopes in the upper boom
Control lever (Fig.135/5)		Rotates the boom system clockwise
		Rotates the boom system anti-clockwise
Toggle switch (Fig.135/8)		The platform pivots clockwise (viewed from above)
		The platform swivels counterclockwise (as viewed from above)
Control lever (Fig.135/4)		Raises the jib
		Lowers the jib

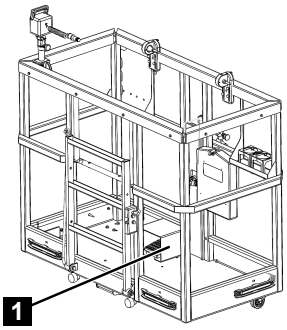

Fig. 136

9. Optionally, both a foot switch (Fig.136/1) and a dead man switch can be installed in the platform. This must be pressed before each movement of the boom system.

6.9.2 Moving the boom system automatically into working position

⚠ WARNING

Material damage due to improper operation.

The control unit will take the most direct (fastest) route to the working position. If the path is obstructed, this can cause substantial damage to the machine.

– If there is a risk of collision, immediately release the control lever and move the machine into the desired position manually.

1. Switch on the machine (Chapter 6.2 „Switching the machine on/off", on page 69).

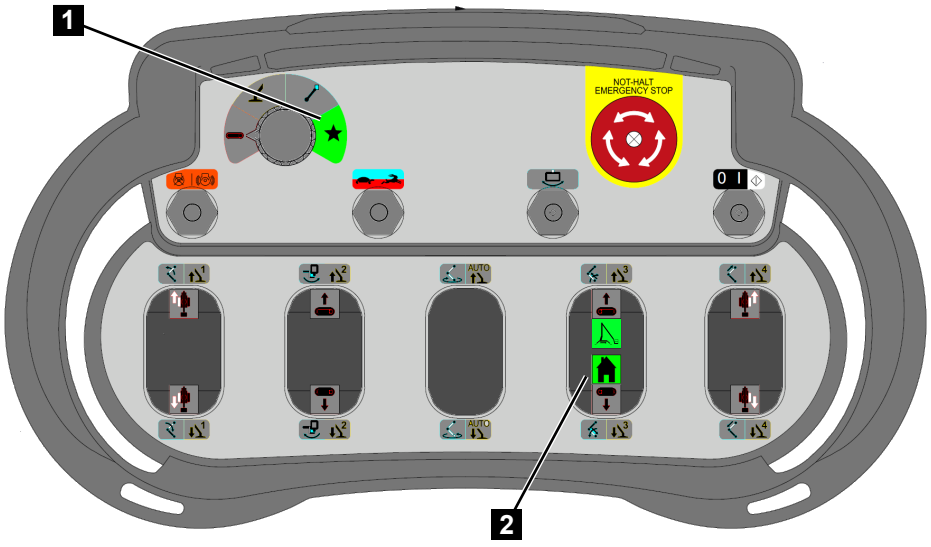

Fig. 137

2. Set the function selection switch (Fig.137/1) to *[special function]* (green).
3. Push the control lever (Fig.137/2) forward to move the boom system to the working position.

6.10 Moving the boom system into transport position

6.10.1 Definition of transport position

Personnel:

- Trained persons

Protective equipment:

- Occupational safety clothing
- Safety boots
- Safety helmet
- Safety harness

Definition of transport position

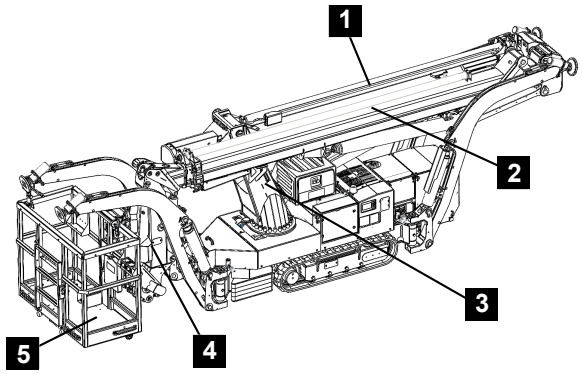

Fig. 138

- The lower boom is in transport position (Fig.138/1).
- The upper boom is in the transport support (Fig.138/2).
- The turntable is in the transport support (Fig.138/3).
- The jib is in transport position (Fig.138/4).
- The platform is in the centre position (Fig.138/5).

6.10.1.1 Moving the boom system into transport position manually

1. Switch on the machine.
2. Retract and lower the upper boom.

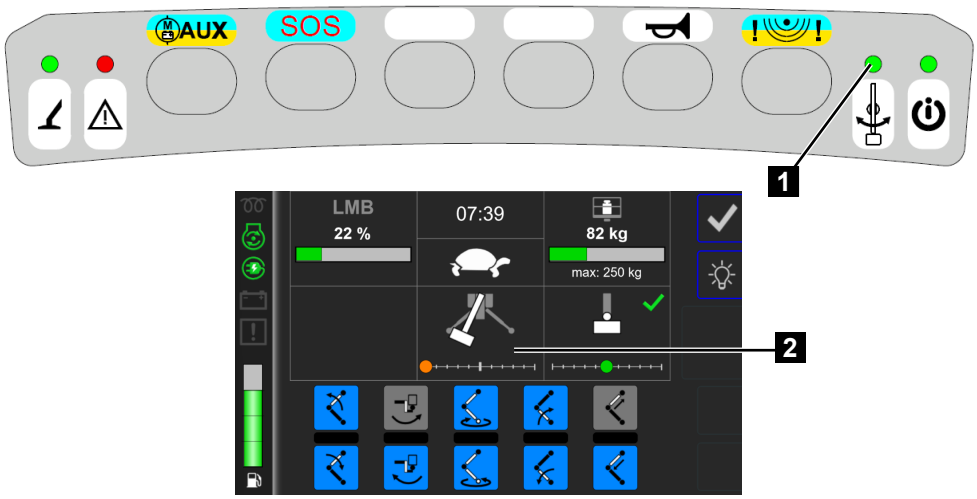

Fig. 139

3. Swivel the boom system towards the transport position until the “boom system in centre position” (Fig.139/1) light lights up. At the same time, the display (Fig.139/2) shows that the centre position is being approached.
4. Retract and lower the lower boom.

6.10.1.2 Moving the boom system to the transport position using the home function

⚠ WARNING

Material damage due to improper operation.

The control unit will take the most direct (fastest) route to the transport position. If the path is obstructed, this can cause substantial damage to the machine.

– If there is a risk of collision, immediately release the control lever and move the machine into the desired position manually.

1. Switch on the machine.

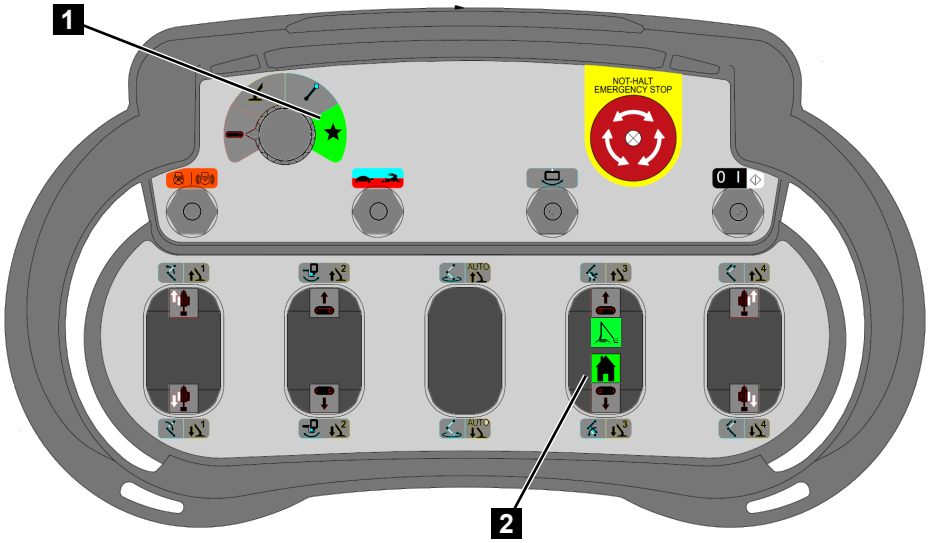

Fig. 140

2. Set the function selection switch (Fig.140/1) to *[special function]* (green).
3. Pull the control lever (Fig.140/2) back to move the boom system into the transport position.

6.11 Bringing the bracings into the transport position

6.11.1 Moving the bracing into the transport position manually

1. Switch on the machine (↳Chapter 6.2 „Switching the machine on/off”, on page 69).
2. Move the boom system into transport position (↳Chapter 6.10 „Moving the boom system into transport position”, on page 113).

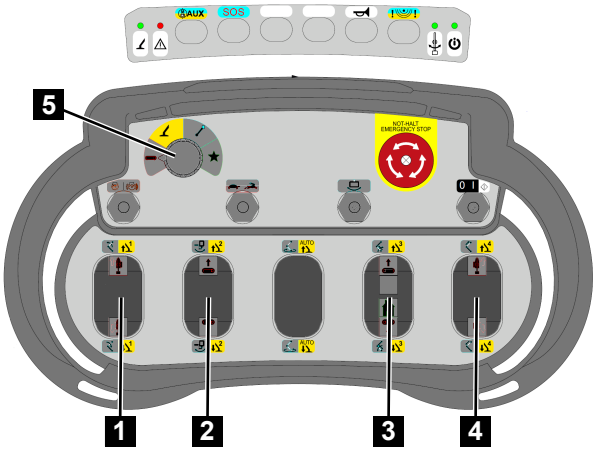

Fig. 141

3. Set the function selector (Fig.141/5) to *[outrigger function]* (yellow).

4. Use the control levers (Fig.141/1, 2, 3 and 4) to operate the outriggers as per the following table.

⚠ WARNING

Risk of injury due to machine listing when lifting or lowering

Due to uneven lifting and lowering, the machine can tip or slide. This can cause severe injuries and significant material damage.

– If the machine begins to list during lifting or lowering, immediately stop the process and realign the machine manually.

Operating element	Symbol	Effect
Control lever (Fig.141/1)		Outrigger 1 extends
		Outrigger 1 retracts
Control lever (Fig.141/2)		Outrigger 2 extends
		Outrigger 2 retracts
Control lever (Fig.141/3)		Outrigger 3 extends
		Outrigger 3 retracts
Control lever (Fig.141/4)		Outrigger 4 extends
		Outrigger 4 retracts

6.11.2 Moving the bracing automatically into the transport position

1. Switch on the machine (Chapter 6.2 „Switching the machine on/off”, on page 69).
2. Move the boom system into the transport position (Chapter 6.10 „Moving the boom system into transport position”, on page 113).

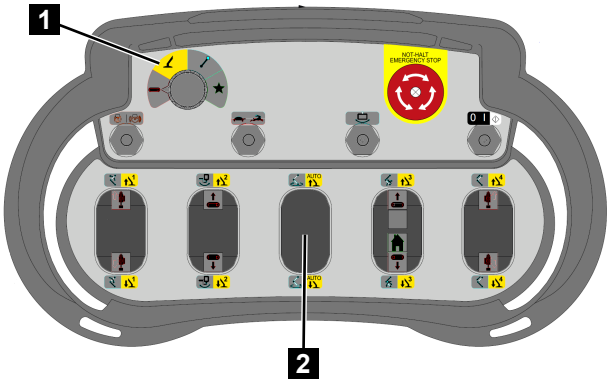

Fig. 142

3. Set the function selector to *[outrigger function]* (yellow) (Fig.142/1).
4. Use the control lever (Fig.142/2) to operate the outriggers as per the following table.

Operating element	Symbol	Effect
Press the control lever (Fig.142/2) upwards	AUTO	Outriggers 1, 2, 3 and 4 retract
Pull the control lever (Fig.142/2) downwards	AUTO	Outriggers 1, 2, 3 and 4 extend

6.12 Filling the fuel tank

Personnel:

- Trained persons

Protective equipment:

- Protective work clothing
- Safety boots

⚠ WARNING

Risk of fire from improper refuelling!

There is a risk of fire from expelled vapours and spilled fuel.

– Do not smoke when refuelling and make that fire and naked flames are kept away.
– Wear suitable gloves during refuelling.
– Shut the engine off before refuelling.
– Only refuel in well-ventilated areas or outdoors as expelled vapours may be inhaled.
– Never fill the fuel tank higher than the mark.
– Wipe up any spilled fuel or absorb it with suitable binding agent and dispose of it before starting up the combustion engine.

1. Make sure that the combustion engine is switched off.
2. Make sure that the machine is aligned horizontally.
3. Wear suitable gloves (diesel gloves, disposable gloves, etc.).

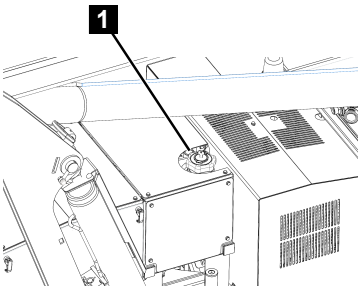

Fig. 143

4. Remove the fuel filler cap (Fig.143/1) and keep it in a clean place.

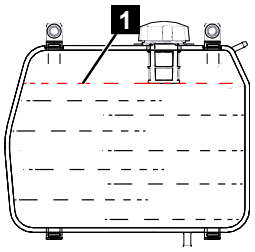

Fig. 144

5. Fill the fuel tank up to the specified maximum fill level (Fig.144/1).
6. Screw the fuel filler cap back on.
7. Wipe up any spilled fuel before starting the combustion engine.

6.13 Secondary control

6.13.1 Activating the secondary control

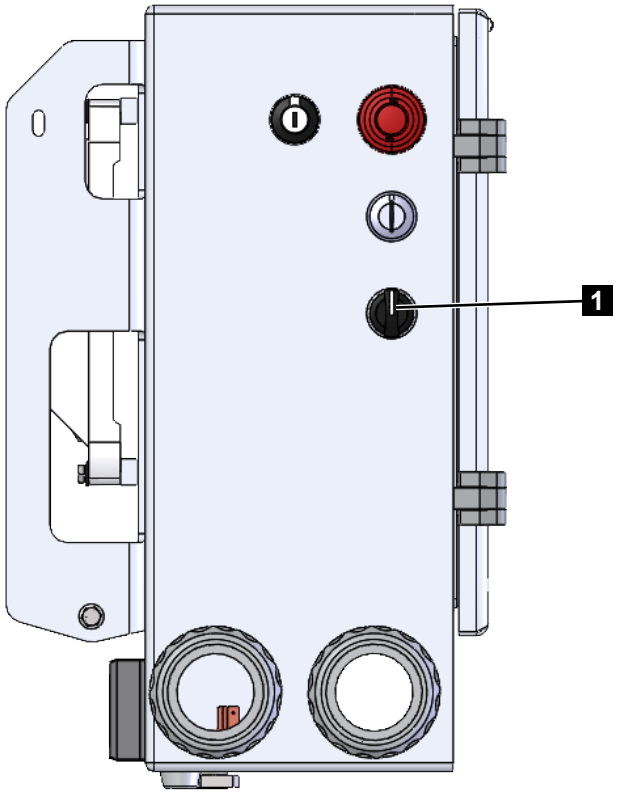

Fig. 145

Switch on the switch (Fig.145/1) for activating the secondary control on the machine; the display interface is switched to the secondary control.

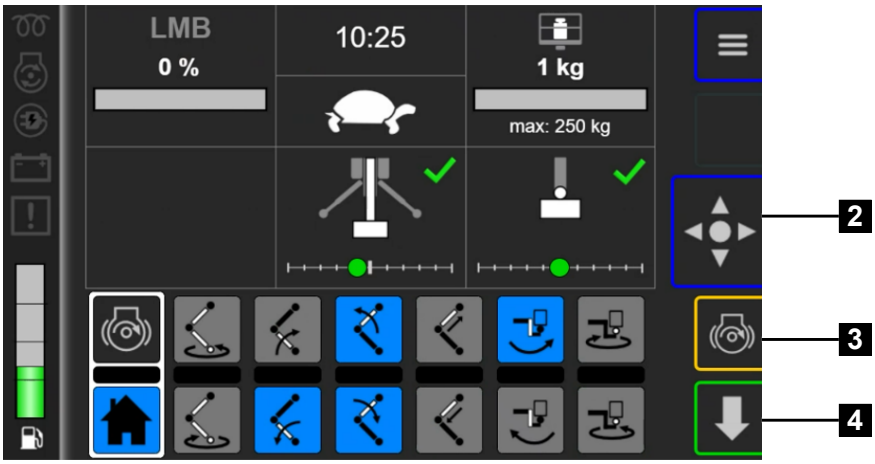

Fig. 146

Use the buttons (Fig.146/2) to select the movement to be made and use the buttons (Fig.146/3) and (Fig.146/4) to start the respective direction of movement.

6.13.1.1 Overriding with the secondary control

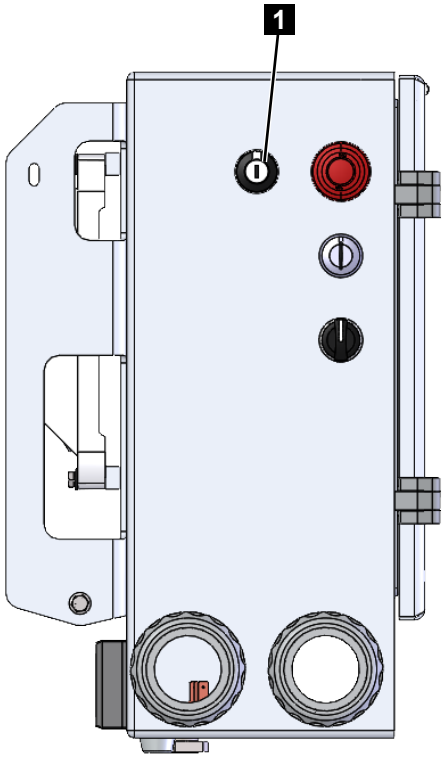

Fig. 147

In the event of a fault, emergency operation can also be activated by activating the key switch for emergency operation (Fig.147/1) on the control box.

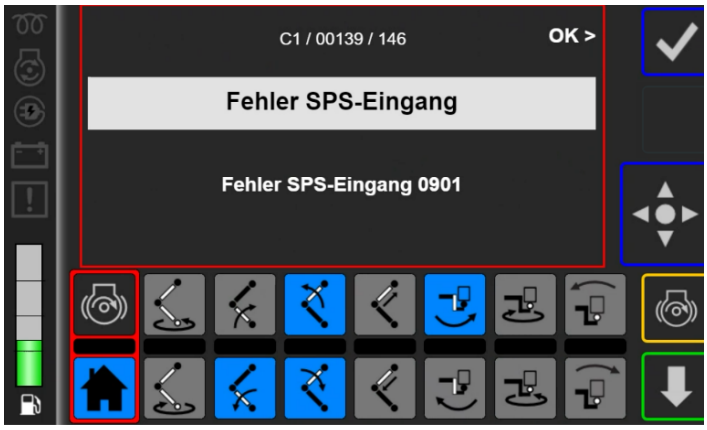

Fig. 148

⚠ WARNING

Risk of injury due to deactivated safety devices

When overriding, all safety equipment (e.g. limit switches, emergency stop, etc.) is disabled.



Fig. 149

Use the buttons (Fig.149/1) to select the movement to be made and use the buttons (Fig.149/2) and (Fig.149/3) to start the respective direction of movement.

To reset emergency operation, the machine must be restarted.

6.13.2 Overriding with the platform control

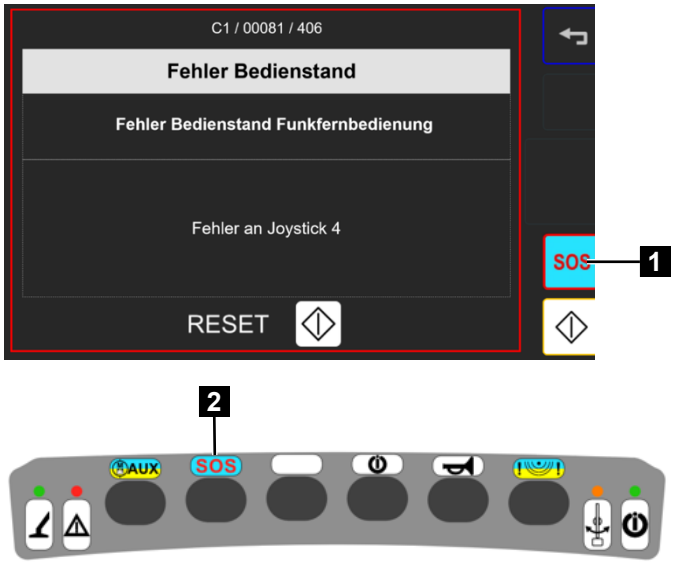

Fig. 150

In the event of a fault, emergency operation can be activated by pressing the “SOS” button (Fig.150/1) on the display and then pressing the “SOS” button (Fig.150/2) on the radio remote control.

⚠ WARNING

Risk of injury due to deactivated safety devices

When overriding, all safety equipment (e.g. limit switches, emergency stop, etc.) is disabled.



Fig. 151

First use the appropriate joysticks to retract the telescopes to their basic position and then lower the profiles.

6.14 Emergency operation

Personnel:

- Trained persons

Protective equipment:

- Occupational safety clothing
- Safety boots
- Safety helmet

⚠ WARNING

Danger of injury due to missing safety equipment

During emergency operation, all safety equipment (e.g. limit switches, emergency stop, etc.) is disabled.

– Perform emergency operation as per the instructions below.

The machine has a manual emergency operation mode which allows you to operate it without the radio remote control, cable radio remote control or control panel.

6.14.1 Operating the boom function in emergency operation

1. Switch off the machine and make sure that the mains plug is disconnected.

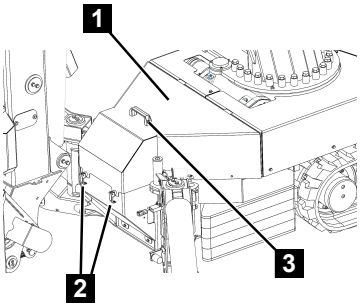

Fig. 152

2. Remove the cover (Fig.152/1) by loosening the catches (Fig.152/2) and using the handle (Fig.152/3).

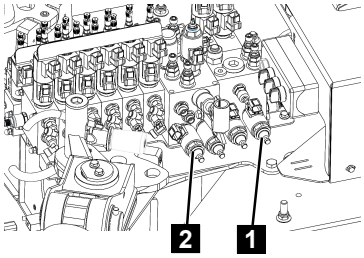

Fig. 153

3. Screw in the valve (Fig.153/1) clockwise.
4. Screw in the valve (Fig.153/2) clockwise.

⚠ WARNING

Risk of injury due to improper operation!

The machine may topple or slip if boom system operation is performed improperly. This can cause severe injuries and material damage.

- If there are people or objects in the platform, keep it as horizontal as possible.
- Always fully retract the upper and lower boom first.
- Swivel the boom system into transport position.
- First, lower the upper boom as far as possible onto the lower boom to prevent the machine from tipping over.

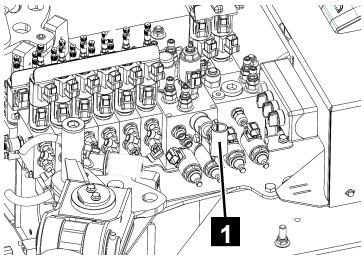

Fig. 154

5. Insert the hand pump lever into the hand pump (Fig.154/1).
6. Actuate the desired valve as per the table below pulling or pushing it and pumping the hand pump (Fig.154/1) at the same time until the selected assembly has reached the desired position.
7. An electric back-up pump can be installed as an option. To do this, press the button on the back-up pump (Fig.154) until the selected assembly has reached the desired position.

Toggle switch

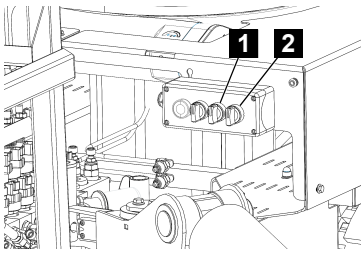

Fig. 155

The valves for platform level (Fig.155/1) and platform rotation (Fig.155/2) are electrically operated via the toggle switches.

Valve setting:

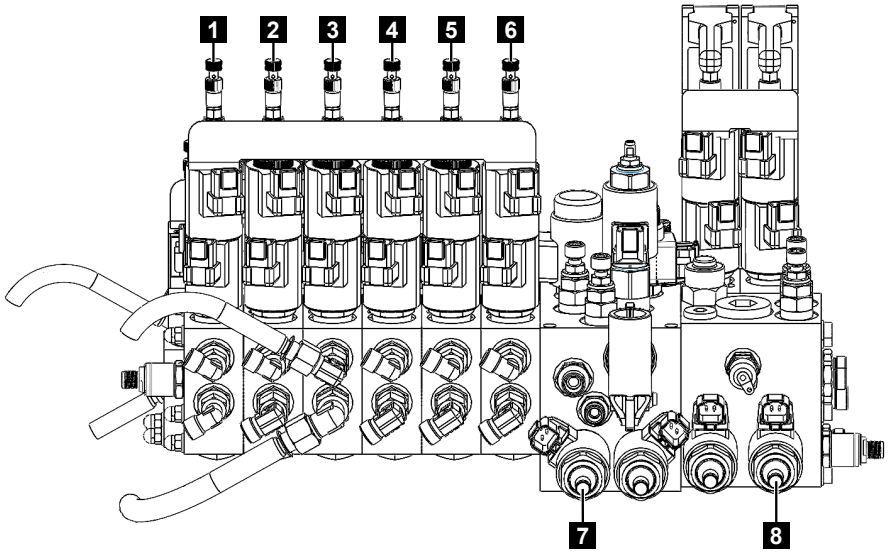

Fig. 156

Operating element	Symbol	Effect
Pull the valve (Fig.156/5)		Telescopes out the lower boom
Press the valve (Fig.156/5)		Telescopes in the lower boom
Pull the valve (Fig.156/3)		Telescopes out the upper boom
Press the valve (Fig.156/3)		Telescopes in the upper boom
Pull the valve (Fig.156/6)		Raises the lower boom
Press the valve (Fig.156/6)		Lowers the lower boom
Pull the valve (Fig.156/4)		Raises the upper boom
Press the valve (Fig.156/4)		Lowers the upper boom
Pull the valve (Fig.156/1)		Swivels the boom system anti-clockwise (as viewed from above)
Press the valve (Fig.156/1)		Swivels the boom system clockwise (as viewed from above)
Turn the toggle switch (Fig. 155/2)		Swivels the platform/lifting device
Turn the toggle switch (Fig. 155/1)	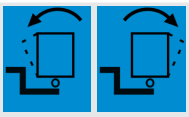	Tilts the platform/lifting device
Pull the valve (Fig.156/2)		Raises the jib
Press the valve (Fig.156/2)		Lowers the jib

⚠ WARNING

Risk of injury due to uncontrolled movements!

If the valves are set incorrectly in normal mode, there is a risk of uncontrolled movements. This can cause severe injuries.

– Ensure that all valves are returned to their original position.

8. Once emergency operation is complete, turn the valves back to their original positions and mount the covers again.

6.14.2 Raising and lowering the outriggers in emergency operation

NOTICE

Emergency operation of the outriggers must be performed by two trained persons.

1. Ensure that the boom system is in the transport position.
2. Switch off the machine and make sure that the mains plug is disconnected.
3. Remove the cover (Fig.157/1) by loosening the catches (Fig.157/2) and using the handle (Fig.157/3).

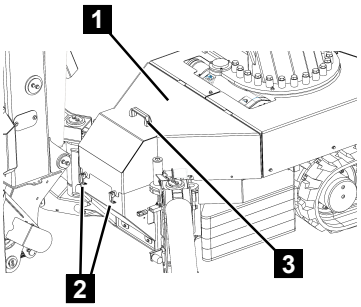

Fig. 157

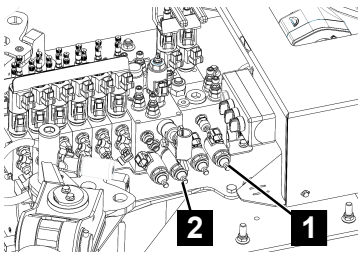

Fig. 158

4. Screw in the valve (Fig.158/1) clockwise.
5. Screw in the valve (Fig.158/2) clockwise.

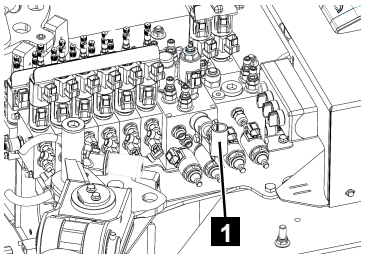

Fig. 159

Valve setting:

Trained person 2:

6. Connect the hand pump lever to the hand pump (Fig.159/1).
7. Actuate the desired valve as per the table below pulling or pushing it and pumping the hand pump (Fig.159/1) at the same time until the selected assembly has reached the desired position.
8. An electric back-up pump can be installed as an option. To do this, press the button on the back-up pump until the selected assembly has reached the desired position.

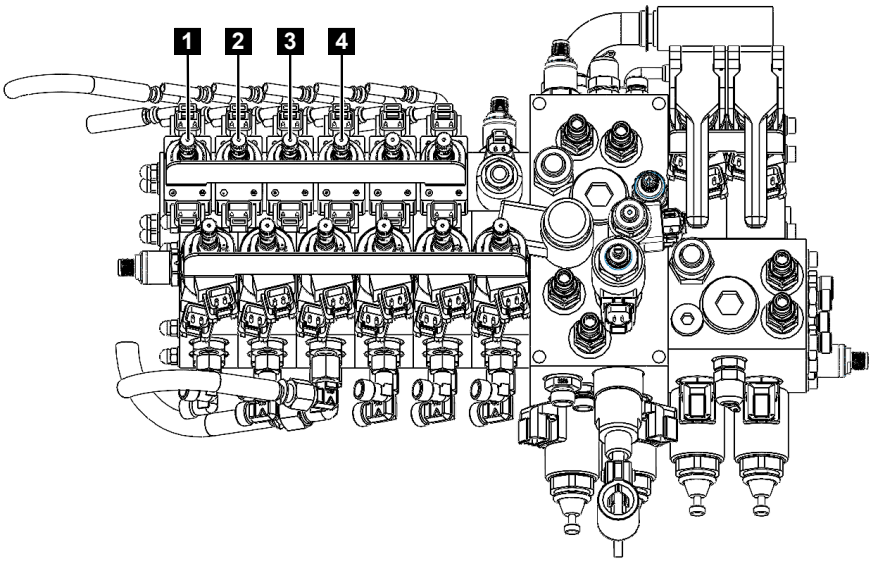

Fig. 160

Operating element	Symbol	Effect
Pull the valve (Fig.160/1)		Lower outrigger 1
Press the valve (Fig.160/1)		Raise outrigger 1
Pull the valve (Fig.160/2)		Lower outrigger 2
Press the valve (Fig.160/2)		Raise outrigger 2
Pull the valve (Fig.160/3)		Lower outrigger 3
Press the valve (Fig.160/3)		Raise outrigger 3
Pull the valve (Fig.160/4)		Lower outrigger 4
Press the valve (Fig.160/4)		Raise outrigger 4

⚠ WARNING

Risk of injury due to uncontrolled movements!

If the valves are set incorrectly in normal mode, there is a risk of uncontrolled movements. This can cause severe injuries.

– Ensure that all valves are returned to their original position.

9. Once emergency operation is complete, turn the valves back to their original positions and mount the covers again.

6.14.3 Moving the machine in emergency operation

NOTICE

Emergency operation of the crawler chassis must be performed by two trained persons.

1. Switch off the machine and make sure that the mains plug is disconnected.
2. Remove the cover (Fig.161/1) by loosening the catches (Fig.161/2) and using the handle (Fig.161/3).

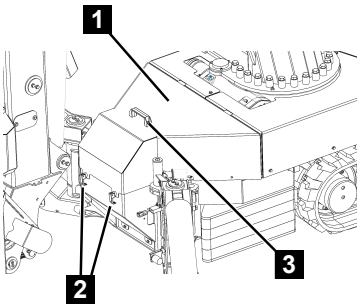

Fig. 161

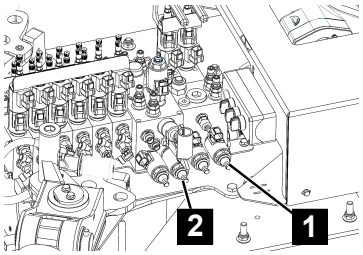

Fig. 162

3. Screw in the platform release valve (Fig.162/1) clockwise.
4. Screw in the outrigger release valve (Fig.162/2) clockwise.

Valve setting:

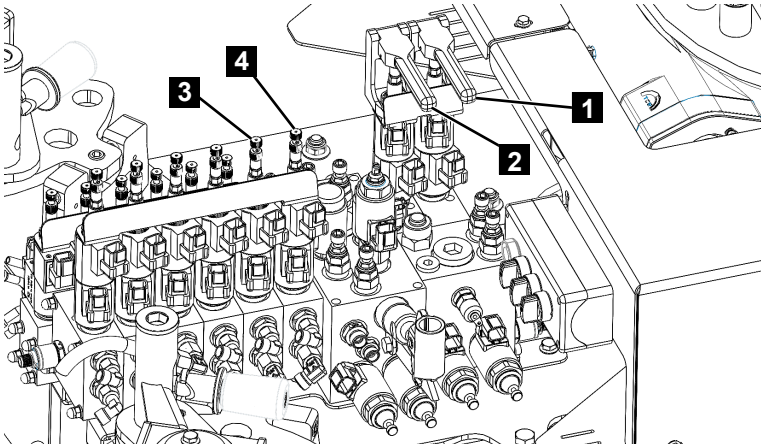

Fig. 163

Operating element	Symbol	Effect
Pull the valve (Fig.163/1) upwards	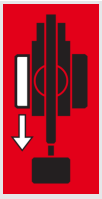	The left-hand crawler chassis runs in reverse
Press the valve (Fig.163/1) downwards		The left-hand crawler chassis runs forwards
Pull the valve (Fig.163/2) upwards	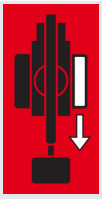	The right-hand crawler chassis runs in reverse
Press the valve (Fig.163/2) downwards		The right-hand crawler chassis runs forwards
Pull the valve (Fig.163/3)		Lower left crawler chassis
Press the valve (Fig.163/3)		Raise left crawler chassis
Pull the valve (Fig.163/4)		Lower right crawler chassis
Press the valve (Fig.163/4)		Raise right crawler chassis

⚠ WARNING

Risk of injury due to uncontrolled movements!

If the valves are set incorrectly in normal mode, there is a risk of uncontrolled movements. This can cause severe injuries.

– Ensure that all valves are returned to their original position.

5. Once emergency operation is complete, turn the valves back to their original positions and mount the covers again.

6.15 Service mode

Personnel:

- Trained persons

Protective equipment:

- Occupational safety clothing
- Safety boots
- Safety helmet

Definition of service mode

Operation of the machine without safety functions using only the hydraulics, with no assistance from the control system. Fully hydraulic operation with power supplied by the combustion engine. Use of the controls is not intended as it may cause problems.

Service mode is only permitted for use if the machine is in technically impeccable condition.

Service mode may be necessary or useful during maintenance work, for example. Service mode is divided into boom, outrigger and crawler functions.

⚠ WARNING

Risk of injury due to missing safety equipment!

Improper machine movements can cause the machine to topple over. This can cause serious or even fatal injuries. In service mode, all safety equipment except for the emergency stop function on the main control box are disabled!

– Execute service mode according to the following instructions.
– The working basket must be clear of people when executing service mode.
– Execution of crane functions using service mode is prohibited.
– Never fully extend the profile package without using aids. See also Lubricating the boom sections and ropes.

6.15.1 Switching the machine on/off for service mode

6.15.1.1 Switching the machine on/off for service mode

Select the Service Mode menu item.

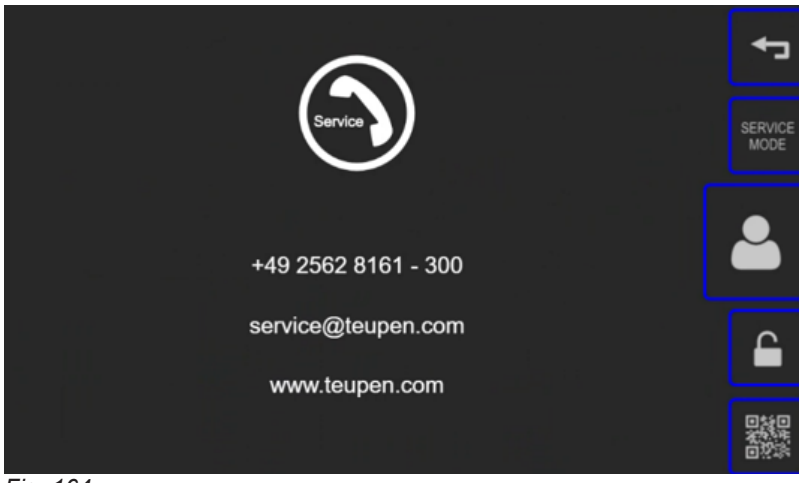

Fig. 164

Press the Service Mode button. The display switches to the window for service mode.

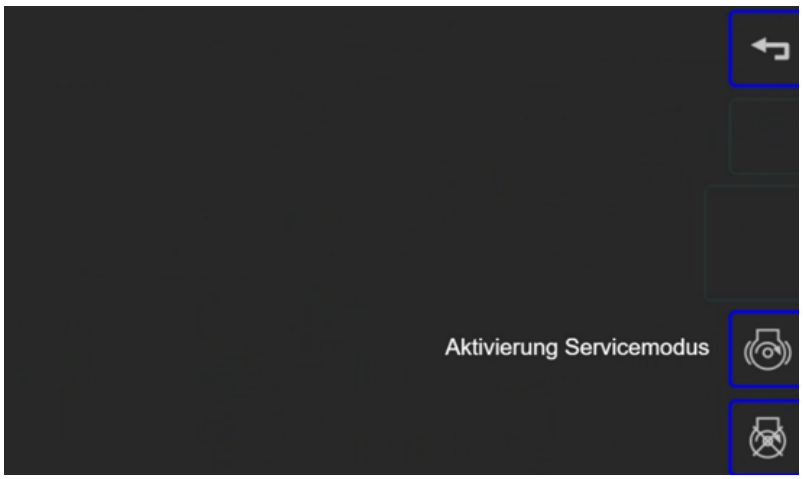

Fig. 165

Pressing the “Motor Start” button activates service mode and simultaneously deactivates the radio remote control. In addition, the motor is started at an increased speed. The motor can be stopped at any time by pressing the “Motor Stop” button.

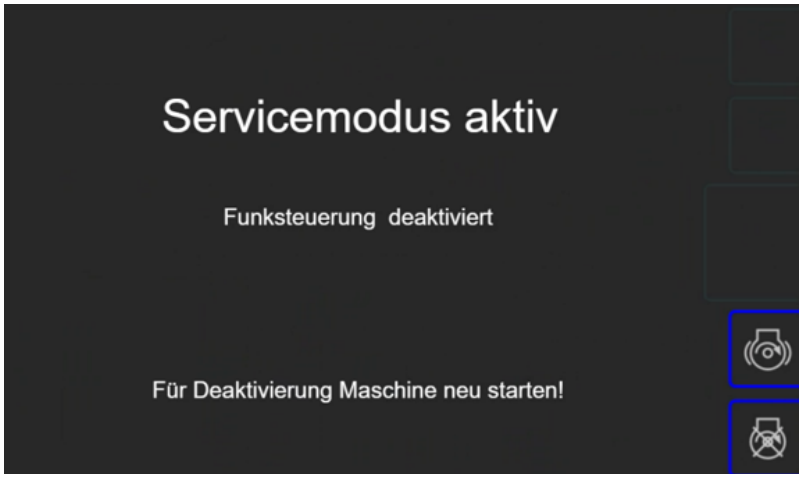

Fig. 166

To reset service mode, the machine must be restarted.

6.15.2 Boom system in service mode

1. Start the machine motor (↳Chapter 6.15.1.1 „Switching the machine on/off for service mode”, on page 133) and make sure that the mains plug is disconnected.
2. Remove the cover (Fig.167/1) by loosening the catches (Fig.167/2) and using the handle (Fig.167/3).

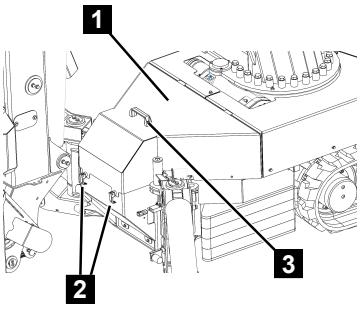

Fig. 167

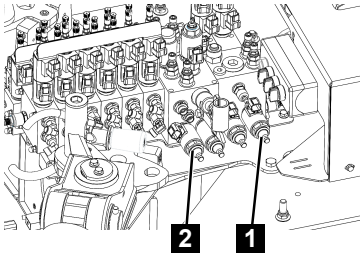

Fig. 168

3. Screw in the valve (Fig.168/1) clockwise.
4. Screw in the boom system release valve (Fig.168/2) clockwise.

⚠ WARNING

Risk of injury due to improper operation!

The machine may topple or slip if boom system operation is performed improperly. This can cause severe injuries and material damage.

– If there are people or objects in the platform, keep it as horizontal as possible.
– Always fully retract the upper and lower boom first.
– Swivel the boom system into transport position.
– First, lower the upper boom as far as possible onto the lower boom to prevent the machine from tipping over.

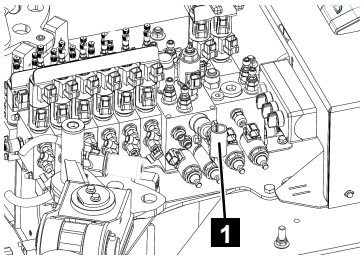

Fig. 169

5. Actuate the desired valve by pulling or pushing it as shown in the table below until the selected assembly has reached the desired position.
6. An electric back-up pump can be installed as an option. To do this, press the button on the back-up pump (Fig. 172/3 until the selected assembly has reached the desired position.

Toggle switch

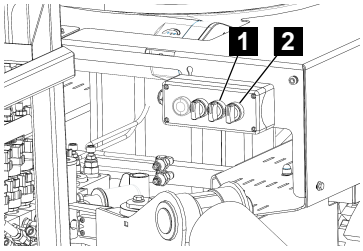

Fig. 170

The valves for platform level (Fig.170/1) and platform rotation (Fig.170/2) are electrically operated via the toggle switches.

Valve setting:

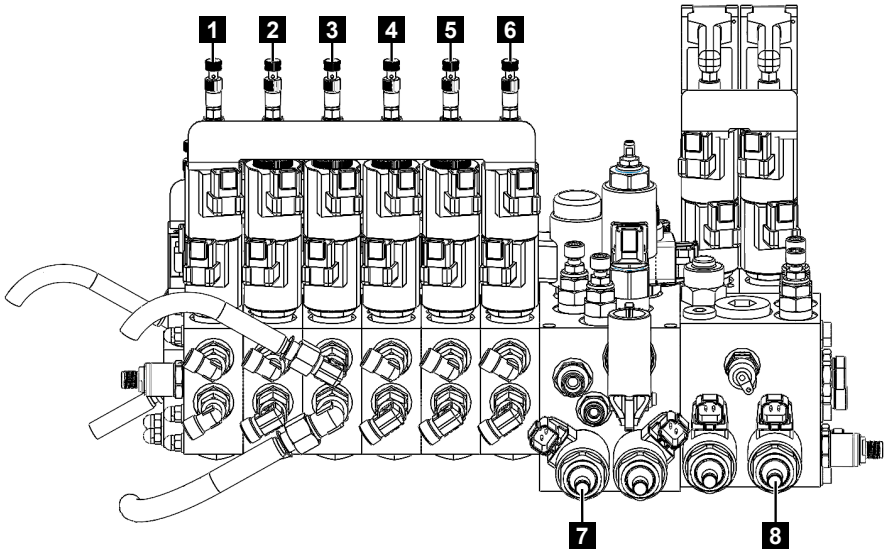

Fig. 171

Operating element	Symbol	Effect
Pull the valve (Fig.171/5)		Telescopes out the lower boom
Press the valve (Fig.171/5)		Telescopes in the lower boom
Pull the valve (Fig.171/3)		Telescopes out the upper boom
Press the valve (Fig.171/3)		Telescopes in the upper boom
Pull the valve (Fig.171/6)		Raises the lower boom
Press the valve (Fig.171/6)		Lowers the lower boom
Pull the valve (Fig.171/4)		Raises the upper boom
Press the valve (Fig.171/4)		Lowers the upper boom
Pull the valve (Fig.171/1)		Swivels the boom system anti-clockwise (as viewed from above)
Press the valve (Fig.171/1)		Swivels the boom system clockwise (as viewed from above)
Turn the toggle switch (Fig. 170/2)		Rotates the platform/lifting device
Turn the toggle switch (Fig. 170/1)	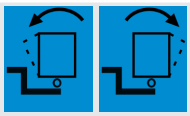	Tilts the platform/lifting device
Pull the valve (Fig.171/2)		Raises the jib
Press the valve (Fig.171/2)		Lowers the jib

⚠ WARNING

Risk of injury due to uncontrolled movements!

If the valves are set incorrectly in normal mode, there is a risk of uncontrolled movements. This can cause severe injuries.

– Ensure that all valves are returned to their original position.

7. Once emergency operation is complete, turn the valves back to their original positions and mount the covers again.

6.15.3 Raising and lowering the outriggers in service mode

NOTICE

Service mode of the outriggers must be performed by two trained persons.

1. Ensure that the boom system is in the transport position.
2. Switch on the machine and make sure that the mains plug is disconnected.
3. Remove the cover (Fig.172/1) by loosening the catches (Fig.172/2) and using the handle (Fig.172/3).

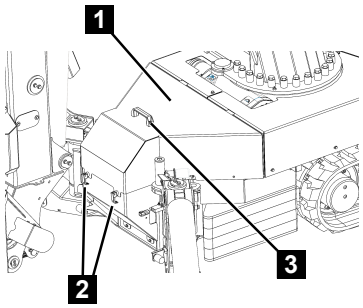

Fig. 172

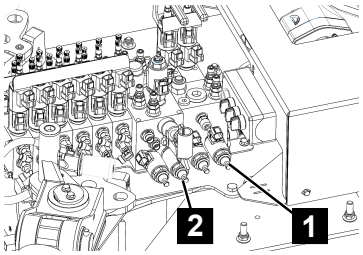

Fig. 173

4. Screw in the valve (Fig.173/1) clockwise.
5. Screw in the outrigger release valve (Fig.173/2) clockwise.
6. Actuate the desired valve by pulling or pushing it as shown in the table below until the selected assembly has reached the desired position.
7. An electric back-up pump can be installed as an option. To do this, press the button on the back-up pump until the selected assembly has reached the desired position.

Valve setting:

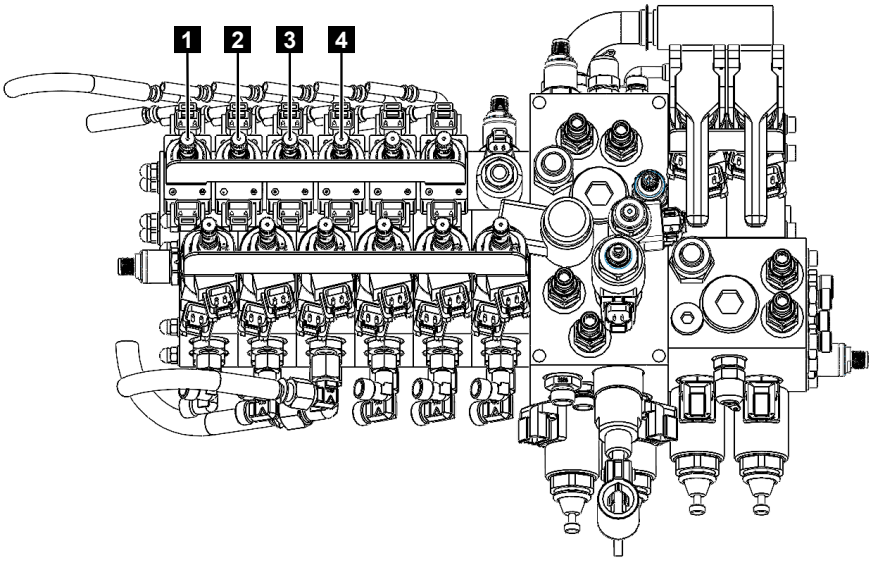

Fig. 174

Operating element	Symbol	Effect
Pull the valve (Fig.174/1)		Lower outrigger 1
Press the valve (Fig.174/1)		Raise outrigger 1
Pull the valve (Fig.174/2)		Lower outrigger 2
Press the valve (Fig.174/2)		Raise outrigger 2
Pull the valve (Fig.174/3)		Lower outrigger 3
Press the valve (Fig.174/3)		Raise outrigger 3
Pull the valve (Fig.174/4)		Lower outrigger 4
Press the valve (Fig.174/4)		Raise outrigger 4
Pull the valve (Fig.174/5)		Lower left crawler chassis
Press the valve (Fig.174/5)		Raise left crawler chassis
Pull the valve (Fig.174/6)		Lower right crawler chassis
Press the valve (Fig.174/6)		Raise right crawler chassis

⚠ WARNING

Risk of injury due to uncontrolled movements!

If the valves are set incorrectly in normal mode, there is a risk of uncontrolled movements. This can cause severe injuries.

– Ensure that all valves are returned to their original position.

8. After service mode, turn the valves back to their original positions and mount the covers again.

6.15.4 Moving the machine in service mode

NOTICE

Service mode of the crawler chassis must be performed by two trained persons.

1. Switch on the machine and make sure that the mains plug is disconnected.
2. Remove the cover (Fig.175/1) by loosening the catches (Fig.175/2) and using the handle (Fig.175/3).

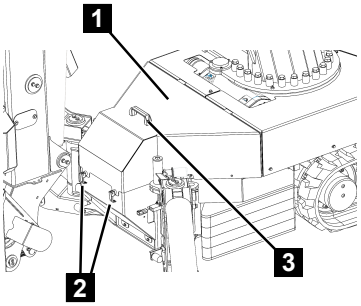

Fig. 175

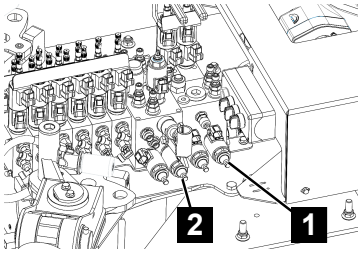

Fig. 176

3. Screw in the valve (Fig.176/1) clockwise.
4. Screw in the valve (Fig.176/2) clockwise.

Valve setting:

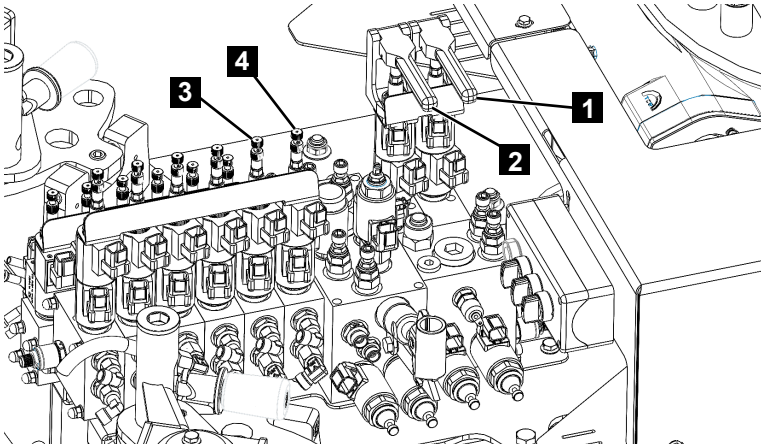

Fig. 177

Operating element	Symbol	Effect
Pull the valve (Fig.177/1) upwards	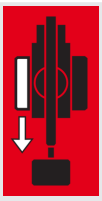	The left-hand crawler chassis runs in reverse
Press the valve (Fig.177/1) downwards		The left-hand crawler chassis runs forwards
Pull the valve (Fig.177/2) upwards	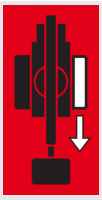	The right-hand crawler chassis runs in reverse
Press the valve (Fig.177/2) downwards		The right-hand crawler chassis runs forwards
Pull the valve (Fig.177/3)		Lower left crawler chassis
Press the valve (Fig.177/3)		Raise left crawler chassis
Pull the valve (Fig.177/4)		Lower right crawler chassis
Press the valve (Fig.177/4)		Raise right crawler chassis

⚠ WARNING

Risk of injury due to uncontrolled movements!

If the valves are set incorrectly in normal mode, there is a risk of uncontrolled movements. This can cause severe injuries.

– Ensure that all valves are returned to their original position.

5. Once emergency operation is complete, turn the valves back to their original positions and mount the covers again.

6.16 12-V auxiliary drive

Personnel:

- Trained persons

Protective equipment:

- Occupational safety clothing
- Safety boots
- Safety helmet

If the machine has stopped because the fuel has run out, it can still be operated using the 12 V auxiliary drive.

This function is used exclusively for machine stoppage due to lack of fuel. It allows the machine to be moved into transport position as quickly as possible.

NOTICE

The auxiliary drive is neither an emergency mode nor a service mode.

It can only be operated using the radio remote control.

All safety devices remain fully active in this mode.

1. Make sure that the combustion engine, the electric drive or the battery drive is switched off.
2. Switch on and pair the radio remote control.

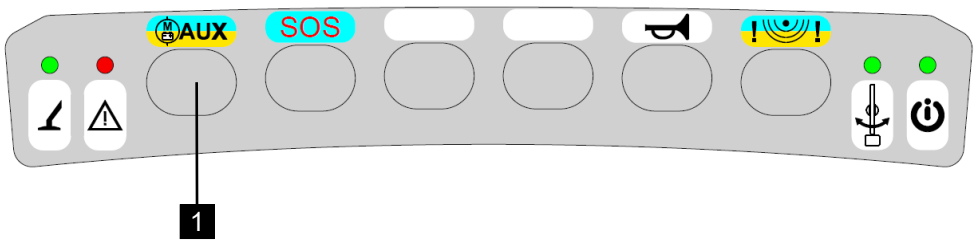

Fig. 178

3. Press the auxiliary drive button (Fig.178/1).
4. At the same time, operate the desired function using the radio remote control.

NOTICE

Limited battery capacity.

– Avoid travelling longer distances using the crawler chassis.
– When moving the boom system, always choose the shortest possible path to the transport position.

6.17 Changing/charging the remote control’s batteries

Personnel:

- Trained personnel

Protective equipment:

- Occupational safety clothing
- Safety shoes
- Safety helmet

Rechargeable batteries for the radio remote control are included in the scope of supply.

NOTICE

A charged battery will last between around 8 and 10 operating hours.

1. Switch off the radio remote control.
2. Remove the empty battery (Fig.179/1) from the back of the radio remote control.

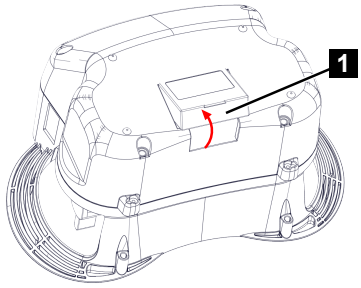

Fig. 179

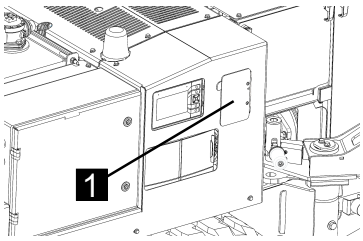

Fig. 180

3. Open the flap (Fig.180/1) on the component carrier.

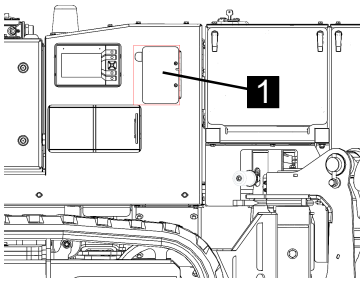

Fig. 181

4. Take a charged battery (Fig.181/1) out of the charger and place a discharged battery in the charger.
5. Insert the charged battery into the radio remote control.

NOTICE

The maximum recharge time is 4 hours.

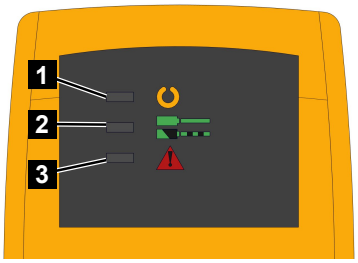

Fig. 182

Charger indicators

- Charger is being supplied with voltage
  - Yellow LED (Fig.182/1) lights up
- Charging in progress
  - Green LED (Fig.182/2) flashes
- Charging completed
  - Green LED (Fig.182/2) lights up
- Rechargeable battery is defective
  - Red LED (Fig.182/3) lights up

NOTICE

For further details, refer to the remote control system manufacturer's operating instructions.

6.18 Jump-starting

Personnel:

- Specialist staff

Protective equipment:

- Occupational safety clothing
- Safety shoes
- Safety goggles

⚠ WARNING

Risk of injury due to improper operation.

Incorrect procedure can cause serious injury and damage.

– Always wear suitable safety goggles and suitable protection for your face and hands.
– Only use proper jump-start leads.
– Observe the procedure described below.

⚠ WARNING

Risk of injury due to improper operation.

Improper handling of the battery can cause serious injuries.

– Always allow a frozen battery to thaw before jump-starting or recharging it. (Risk of explosion)
– Do not lean over the battery during jump-starting or recharging. (Risk of chemical burns)
– Keep ignition sources (open lights, burning cigarettes etc.) away from the batteries. (Risk of explosion)
– Never use the battery's negative terminal for charging or bridging. (Risk of explosion)

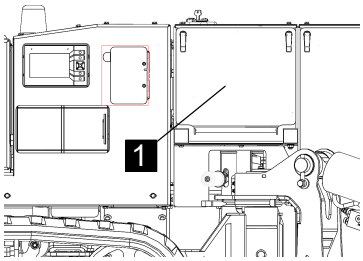

Fig. 183

1. Remove the cover (Fig.183/1).
2. Make sure the charging device is switched off.
3. Make sure that the ignition and all of the machine's electrical loads are switched off.

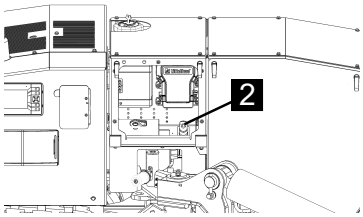

Fig. 184

4. Remove the rubber cover from the jump-starting point (Fig.184/2).
5. Connect the red cable to the jump-starting point (Fig.184/2).
6. Connect the other end of the red cable to the donor battery's positive pole.
7. Connect the black cable with a suitable ground in the engine compartment.
8. Connect the other end of the black cable to the donor battery's negative pole.
9. Make sure the leads cannot come into contact with any rotating parts.
10. Switching on the machine (↳Chapter 6.2.2 „Switching the machine on/off (combustion engine)", on page 70)
11. Once the jump start has been completed successfully, the jump-start leads can be disconnected by reversing the above sequence.
12. Screw the cover back on.

6.19 Locks

6.19.1 Resetting the combination on the shackle lock

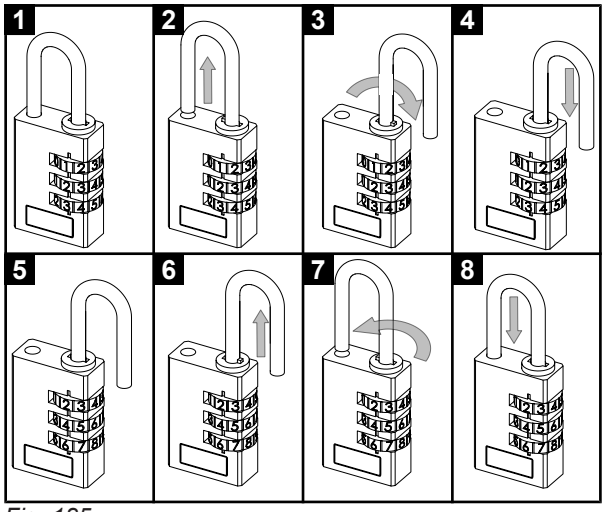

Fig. 185

1. Set the last 3 digits of the serial number (in the example 123).
2. Pull up the shackle.
3. Turn the shackle 180°.
4. Push the shackle down.
5. Enter the desired new number (in the example 246).

6. Pull up the shackle.
7. Turn the shackle 180°.
8. Push the shackle down.

7 Maintenance

7.1 Safety instructions for maintenance

Electric power

⚠ DANGER

Risk to life due to electric current!

Contact with live components can cause fatal injuries. Activated electrical components can perform uncontrolled movements and cause serious injuries.

– Before starting work, switch off the voltage supply and secure it to prevent any restart.

Securing to prevent restart

⚠ WARNING

Risk of fatal injury from unauthorised restart!

An unauthorised restart of the power supply during troubleshooting poses a risk of serious injuries and death to persons in the danger zone.

– Before starting work, switch off all power supplies and secure them to prevent restart.

Improper maintenance work

⚠ WARNING

Risk of injury due to improperly performed maintenance work!

Improper maintenance can cause severe injuries and significant property damage.

– Ensure there is sufficient space for assembly before starting work.
– Make sure the assembly location is tidy and clean! Components and tools that are stacked loosely or lying around present a risk of accidents.
– Do not loosen connections sealed with yellow sealing wax.
– If components are removed, ensure correct reassembly, reinstall all mounting elements, and tighten screws to the specified torque.
– Observe the following before putting the machine back into service:

⇨ Make sure that all maintenance work was performed and completed in line with the specifications and notes in this manual.

⇨ Make sure that there are no people in the danger zone.

⇨ Make sure that all covers and safety devices are installed and are working correctly.

Exhaust gases

⚠ WARNING

Risk of fatal injury due to suffocation and poisoning from exhaust gases

Upon inhalation, exhaust gases can lead to suffocation, cause severe poisoning and bring about severe injuries to the respiratory tract.

– Always ensure fresh air supply when working on the machine in diesel engine mode.
– If exhaust gases are inhaled, take the affected person into an area with fresh air and call a doctor immediately.

Batteries

⚠ WARNING

Risk of injury through improper handling of batteries!

Improper handling of batteries may cause them to explode or to leak harmful fluids. Skin contact with these fluids can cause chemical burns. Ingestion can cause severe poisoning. Eye contact can result in permanent blindness.

– Never short-circuit a battery's contacts (positive and negative terminals).
– Never use or store batteries in areas subject to potentially explosive atmospheres or where temperatures could become high.
– Never try to solder, repair, modify, convert or disassemble batteries.
– Always keep batteries out of reach of unauthorised persons.
– To prevent fire, overheating, explosion or battery fluid leaks, always protect batteries from hard impacts, high weight loads and any other harmful effects. Leaked fluid may combust.
– Avoid contact with leaked fluid.

Measures after contact with battery fluid:

- Wash skin that has come into contact with battery fluid with plenty of water and soap.
- In the event of eye contact, immediately rinse the eye, including under the eyelid, with clean water for at least 15 minutes. Direct a soft stream of water directly into the eye, do not rub. Seek medical attention immediately.

Hot surfaces

⚠ WARNING

Risk of injury from hot surface!

The surfaces of motor components can become very hot during operation. Skin contact with the hot surfaces will cause serious burns to the skin.

– Avoid contact with hot motor components such as the exhaust system, radiator, hoses and motor block.
– Before performing any work on motor components, check whether they are hot. Allow them to cool down if necessary.

Hot lubricants

⚠ WARNING

Risk of injury from hot lubricants!

Consumables (coolants, motor oil or hydraulic oil) can reach high temperatures during operation. Skin contact with the hot consumables will cause serious burns to the skin.

– Avoid contact with hot lubricants.
– Before performing any work on consumables, check whether they are hot. Allow them to cool down if necessary.

Antifreeze agent

⚠ WARNING

Health hazard due to antifreeze agent!

The coolant of the diesel engine consists of a mixture of water and antifreeze agent. Antifreeze agent can cause serious damage to health if touched, swallowed or inhaled.

– Avoid contact with the antifreeze agent.
– Do not eat, drink or smoke when handling antifreeze agent. Wash your hands before breaks and when you finish work.
– Wear protective gloves when working with antifreeze agent.

Measure after contact with antifreeze agent:

– After skin contact, wash the affected areas with plenty of water.
– After contact with the eyes, rinse them thoroughly with plenty of water for at least 15 minutes and consult a physician.
– After swallowing, rinse with water and then drink plenty of water. Consult a physician.
– Go outside in the fresh air after inhaling aerosols.

Motor oil

⚠ WARNING

Risk of injury from motor oil!

Motor oil contains toxic substances that can cause inflammations and are carcinogenic.

– Avoid any skin contact with motor oil.
– In the event of inadvertent skin contact, immediately wash the affected areas with soap. Never use petroleum ether, solvents or other chemical detergents.

Environmental protection

Observe the following notes on environmental protection when performing maintenance work:

– At all lubrication points that are lubricated by hand, remove escaping, old or excess greases and dispose of in accordance with the local regulations.
– Collect changed oils in suitable containers and dispose of in accordance with local regulations.

The following sections describe the maintenance work which is required to ensure the machine can be operated in the optimum manner and fault-free.

If increased wear is discovered during regular checks, the requisite maintenance intervals will need to be shortened to match the actual signs of wear. Contact the manufacturer if you have any questions regarding maintenance work or intervals, see the contact data on page 2.

7.2 Maintenance work

7.2.1 Cleaning the machine

Personnel:

- Qualified personnel

Protective equipment:

- Protective work clothing
- Safety boots
- Safety goggles



Fig. 186

NOTICE

Risk of material damage due to improper cleaning!

Improper cleaning can cause damage to the machine.

– Do not use any acid-based or aggressive cleaning agents.
– Remove all cleaning agents thoroughly with clear water.
– Do not clean the respectively marked components with high-pressure jets.

1. Pull the mains plug.
2. Make sure that all covers are fitted properly.
3. Remove coarse dirt with a high-pressure cleaner. Do not clean the respectively marked components (Fig.186) with the high-pressure cleaner.
4. Clean the machine with a sponge, acid-free household cleaner and a water hose.
5. After cleaning the machine, lubricate it.

7.2.2 Tensioning the track

Personnel:

- Qualified personnel

Protective equipment:

- Protective work clothing
- Safety boots

Special tool:

- Grease gun

Materials:

- Multi-purpose lubricant

1. Stabilise the machine. The machine must be stabilised properly and the tracks must no longer touch the ground.
2. Unscrew and remove the maintenance cover (Fig.187/2).

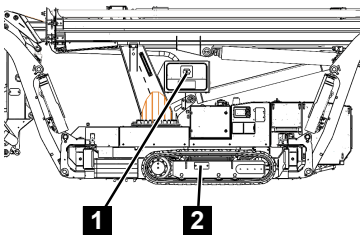

Fig. 187

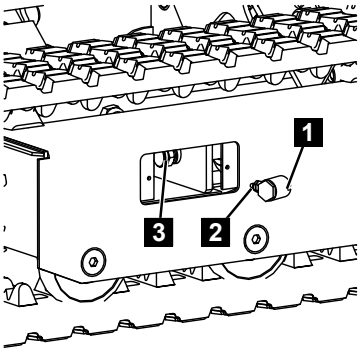

Fig. 188

3. Push the sliding coupling (Fig.188/1) with the grease nipple (Fig.188/2) first onto the grease tensioning cylinder (Fig.188/3).

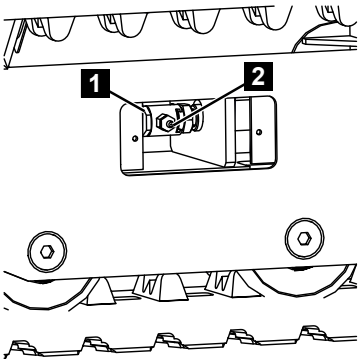

Fig. 189

4. Turn the sliding coupling (Fig.189/1) 180° clockwise until the grease nipple (Fig.189/2) faces outwards.
5. Use a grease gun to inject multi-purpose grease through the grease nipple (Fig.189/2) until the track has been tensioned.

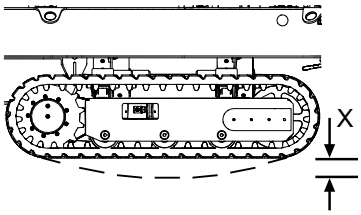

Fig. 190

6. Ensure that there is 10–15 mm of slack (Fig.190/X).
7. Make sure that no lubricant escapes from the grease nipple.

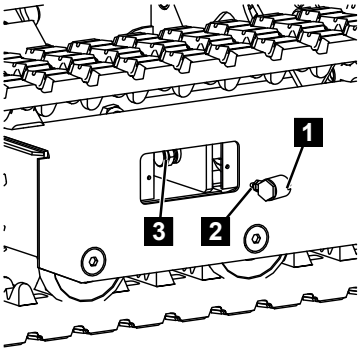

Fig. 191

8. Turn the slide coupling (Fig.191/1) back 180° anti-clockwise and remove it from the grease tensioning cylinder (Fig.191/2).

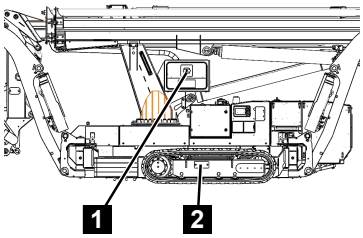

Fig. 192

9. Clean the button head coupler and place it back into the stowage space (Fig.192/1).
10. Tighten the maintenance cover (Fig.192/2).

7.2.3 Hydraulic system

NOTICE

Non-approved hydraulic oils!

May result in damage to hydraulic components.

– Only use approved hydraulic oils.

NOTICE

Mixing hydraulic oils!

May result in damage to hydraulic components.

– Only fill with a single type of hydraulic oil. Never mix mineral-base hydraulic oil with organic-base hydraulic oil.

NOTICE

Improper oil change!

May result in damage to hydraulic components.

– When changing the oil type, drain the entire hydraulic oil and flush the system.

NOTICE

Risk of material damage due to improper filling!

If the oil level is incorrect, the hydraulic system mail fail or become damaged.

– Check the oil level regularly.

NOTICE

Starting the motor during an oil change!

May result in damage to hydraulic components.

– Never start the motor is there is no or too little hydraulic oil in the tank.

7.2.3.1 Checking/topping up the hydraulic oil

Personnel:

- Qualified personnel

Protective equipment:

- Protective work clothing
- Safety boots

Materials:

- Hydraulic oil (Chapter 3.8 „Consumables”, on page 42)

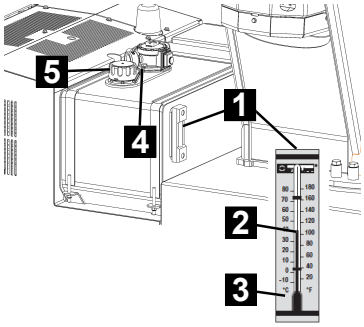

Fig. 193

1. Move the machine into the transport position.
2. Make sure that the machine is aligned horizontally.
3. Switch off the machine.
4. Check the oil level max. (Fig.193/1) and min. (Fig.193/3) on the oil tank.
5. The hydraulic oil must be filled up to the max. marking (Fig.193/1). If necessary, top up.
6. To do so, open the padlock (Fig.193/4) and remove it.
7. Unscrew the cap (Fig.193/5) from the hydraulic tank.
8. Top up the hydraulic fluid to the maximum mark on the inspection glass via a filter unit with a 10 µm filter (Fig.193/1).
9. Collect any leaked hydraulic oil and dispose of it properly.
10. Screw the cap (Fig.193/5) back on.
11. Secure the cap using the padlock (Fig.193/4).

7.2.4 Replacing the hydraulic filters

Personnel:

- Qualified personnel

Protective equipment:

- Protective work clothing
- Safety boots
- Safety goggles

Materials:

- Filter inserts

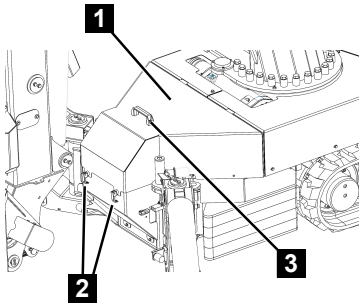

Fig. 194

The main filter and the platform level filter are located in the main control block at the rear of the machine.

Access:

Remove the cover (Fig.194/1) by loosening the catches (Fig.194/2) and using the handle (Fig.194/3).

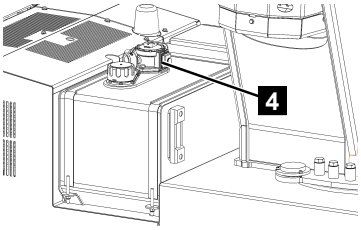

Fig. 195

The recirculation filter (Fig.195/4) is located on the hydraulic tank.

CAUTION

Risk of material damage due to improper filling!

An insufficient hydraulic oil level can damage the hydraulic pumps.

– After changing the filters, always check the hydraulic oil level.

The following describes how to replace the filter inserts using a hydraulic filter as an example.

Replacing the filter insert

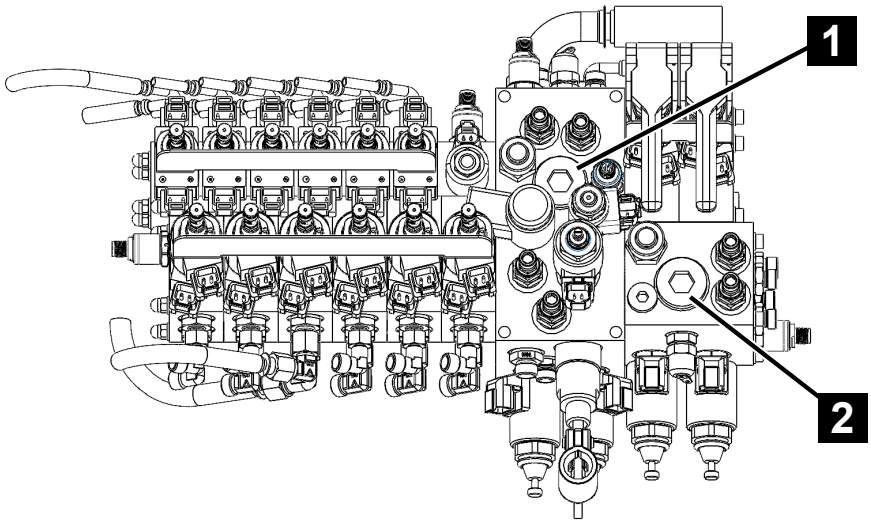

Fig. 196

The main filter (Fig.196/1) and the filter platform level (Fig.196/2) are located in the hydraulic block under the dummy plugs. To replace the filter elements, unscrew the dummy plugs and replace the corresponding filter elements. Screw in the dummy plugs again and tighten to 170 Nm.

7.2.5 Checking the gearbox oil for the crawler chassis

Personnel:

- Qualified personnel

Protective equipment:

- Protective work clothing
- Safety boots

Material:

- Gearbox oil (↳Chapter 3.8 „Consumables”, on page 42)

NOTICE

Risk of material damage due to improper filling!

If the oil level is incorrect, the hydraulic system mail fail or become damaged.

– Check the oil level regularly.

Each of the chain drives has a separate gearbox. Each of the following instructions applies for one gearbox.

1. Move the machine into transport position on level ground.

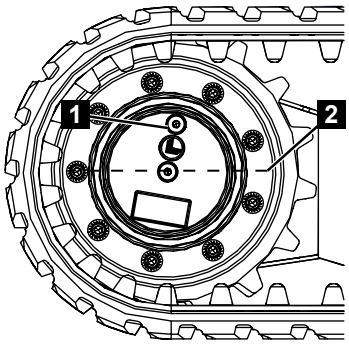

Fig. 197

2. Align the machineDriving the machine so that the screw connection (Fig.197/1) is positioned above the centre of the gearbox (Fig.197/2).
3. Switch off machine (↳Chapter 6.2 „Switching the machine on/off", on page 69).

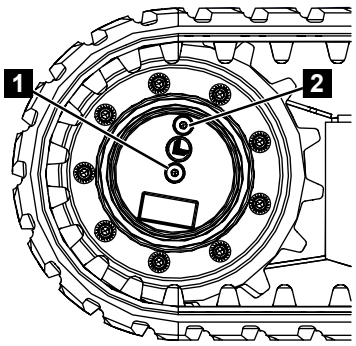

Fig. 198

4. Unscrew the screw connections (Fig.198/1 and 2).

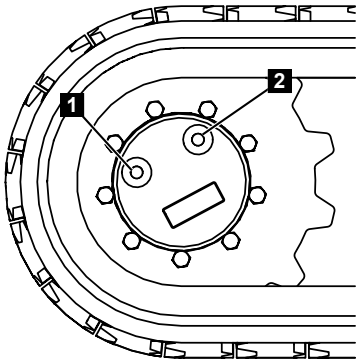

Fig. 199

5. Check the oil level by sight. The gearbox must be filled with oil up to the bottom edge of the threaded hole (Fig.199/1).
6. If required, top up gearbox oil. To do this, slowly pour the oil through the drill hole (Fig.199/2) until it reaches the bottom edge of the threaded hole (Fig.199/1).
7. Make sure that the seals and copper washers on the screw connections are in place and free of damage.

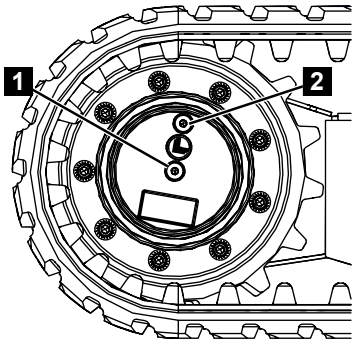

Fig. 200

8. Re-tighten the screw connections (Fig.200/1 and 2) with the seals or copper washers.

7.2.6 Lubricating the transports

Personnel:

- Qualified personnel
- Trained person

Protective equipment:

- Protective work clothing
- Safety boots

Material:

- High-performance lubricant (Chapter 3.8 „Consumables”, on page 42)
- Cleaning products (Chapter 3.8 „Consumables”, on page 42)

⚠ WARNING

Risk of injury due to deactivated safety devices!

When operating the machine in emergency or service mode, all safety equipment is disabled.

NOTICE

The boom functions can be run from outside the platform using the radio control, providing not more than 40 kg lies in the platform or the lifting device is mounted.

1. Stabilise the machine (minimum stabilised height).
2. Switch to service mode(Chapter 6.15 „Service mode”, on page 132).
3. Fully telescope out the upper boom. While telescoping in and out, the wire ropes can be greased with wire rope spray through the openings (Fig.202/1) on the profiles and checked. (see information on wire rope check below).
4. Clean the sliding surfaces of the upper boom transport on all sides, then re-grease all the sliding surfaces.

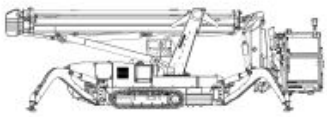

Fig. 201

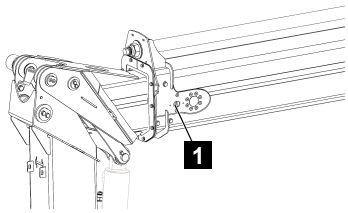

Fig. 202

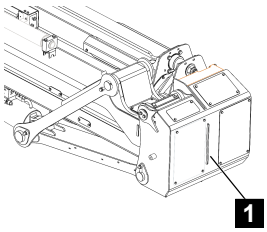

Fig. 203

5. Fully retract the upper boom again.
6. Remove the rear cover on the upper boom (Fig.203/1).

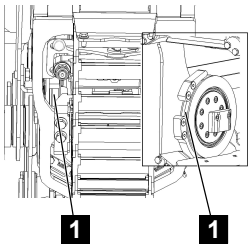

Fig. 204

7. Check the wire ropes through the split rope run-off safety device (Fig.204/1).
8. Fit the rear cover on the upper boom.

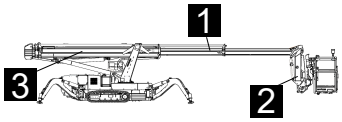

Fig. 205

9. Raise the upper boom (Fig.205/1) so that the platform cannot collide with the turntable while the lower boom (Fig.205/3) transport is being telescoped out.
10. Move the jib (Fig.205/2) to the position where it is the extension of the upper boom.

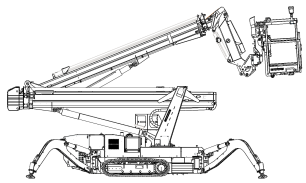

Fig. 206

11. Secure the lower boom using a crane.

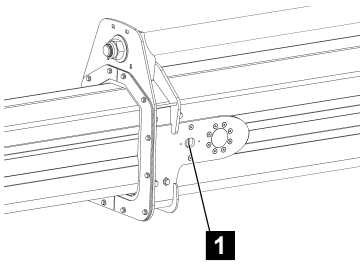

Fig. 207

12. Telescope the lower boom out all the way. While the lower boom is extended and retracted, the wire ropes on the profiles can be greased with wire rope spray through the openings (Fig.207/1) on the profiles and checked. (See information on the wire rope check below.)
13. Clean the sliding surfaces of the lower boom transports on all sides, then re-grease all the sliding surfaces.

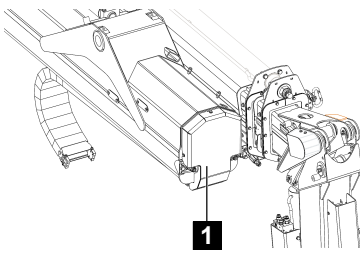

Fig. 208

14. Remove the cover (Fig.208/1) on the lower boom.

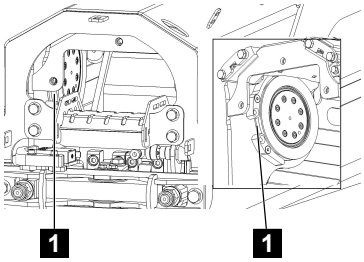

Fig. 209

15. Check the split rope run-off safety device (Fig.209/1).
16. Fit the cover on the lower boom.
17. Telescope the lower boom in all the way.
18. Remove the crane.
19. After the profiles and wire ropes have been greased, the machine must be brought back into the transport position.
20. Exit service mode.

Notes on rope inspection:

If damage to the wire rope is detected, the defective wire ropes must be replaced. Depending on the condition of the wire ropes, the maintenance intervals specified in the maintenance schedule must be shortened.

Additionally, the wire ropes can be checked by a person specializing in wire rope checks or by TEUPEN Service.

Only wire ropes released by TEUPEN may be used.

Types of damage:

- Broken wire strands



Fig. 210

- Frayed wire strands

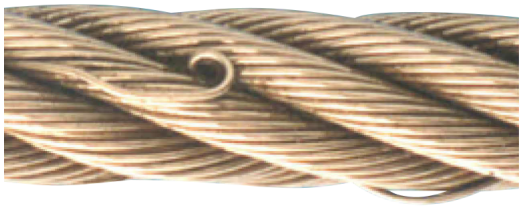

Fig. 211

- Corrosion



Fig. 212

- Mechanical wear



Fig. 213

- Reduced wire diameter

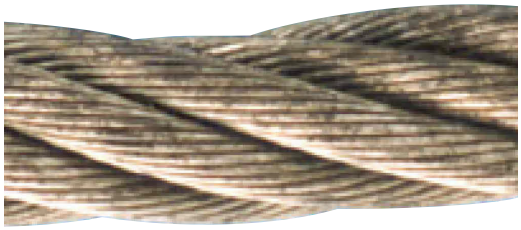

Fig. 214

- Protruding stranded wire

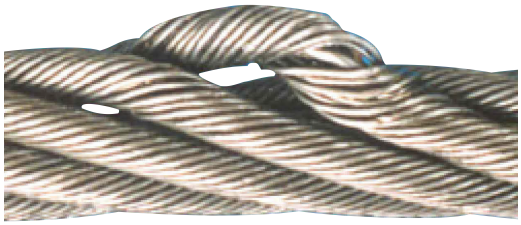

Fig. 215

7.2.7 Working basket

Personnel:

- Qualified personnel

Protective equipment:

- Protective work clothing
- Safety boots

⚠ DANGER

Danger due to defective attachment points in the platform!

Defective attachment points may cause severe or even fatal injuries. If any of the attachment points in the platform are defective, there can be no guarantee that they will be able to secure the people in the platform in case of an accident.

– It is prohibited to operate the machine if any of the attachment points in the platform are defective.
– Contact the manufacturer to arrange repair or replacement of any defective components.
– Always follow the work steps below.
– Before each use, the attachment points must be checked to ensure they are in good working condition.

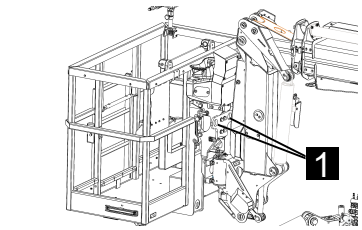

Fig. 216

1. Check the attachment points for any signs of damage, e.g. warping.
2. Check all around the attachment point weld seams for cracks.

⚠ WARNING

Resuming use of the aerial access platform after an accident!

After an accident involving the aerial access platform, there is a possibility that the structure will no longer offer sufficient protection.

– If an accident occurs, always conduct a full inspection of the entire aerial access platform before further use, or arrange for TEUPEN Customer Service to carry out such an inspection.
– Replace the safety belts.
– Check the work platform for damage and ensure that it is stable.
– Check the attachment points.
– Check that the door and stepladder are in good working order.

7.2.8 Lubricating the rotating assembly

Personnel:

- Qualified personnel

Protective equipment:

- Occupational safety clothing
- Safety boots

Tools:

- Grease gun

Material:

- Multi-purpose grease Consumables

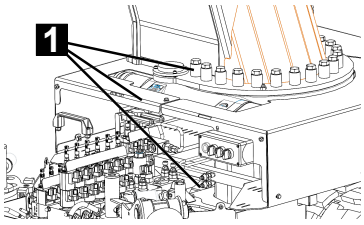

Fig. 217

1. Use a grease gun to inject multi-purpose grease through the rotating assembly's grease nipples (Fig.217/1).
2. Remove the excess grease and dispose of it properly.

7.2.9 Rotating assembly tightening torques

⚠ WARNING

Danger through incorrect tightening torques!

If screws are tightened with the incorrect tightening torque, components can come loose and cause injury and damage.

- Never exceed the maximum allowable tightening torque.
- Regularly double-check the tightening torques.
- Always observe the applicable guidelines and design criteria for threaded connections.

The table shows the required tightening torques for achieving the most reliable initial tension for the screws of the rotating assembly.

Screw size	Screw quality	Tightening torque
M12	10.9	110 Nm
M16	10.9	270 Nm

7.2.10 Winter operation

In order to prevent faults when operating the machine in wintry and sub-zero conditions, there are a number of preventive measures that must be taken. These include:

- Prevent build-up of water residue.
- The water drain holes must be unobstructed.
- Do not use steam jets on the machine.
- Keep the ladder and the floor of the working basket free of snow and ice.
- Sliding blocks must not be allowed to freeze onto components.
- Make sure that the chains and ropes used to retract and extend the profile are kept free of ice.
- Check the sensor equipment to make sure it is clean.
- All the limit switches and proximity switches must be free of snow and ice. Where necessary, use heat or lubricant with de-icing or water-resistant/anti-corrosive properties to restore freedom of movement.
- In extremely cold conditions, the hydraulic system needs to be heated up. This can be achieved by keeping the drive unit running or by moving the crawler tracks, outriggers or platforms slightly.
- Observe the drive motor's operating instructions (running the engine to operating temperature, anti-freeze, battery charge, etc.).

7.2.11 Drive units – Overview

NOTICE

These operating instructions do not include any detailed data on maintenance, commissioning or upkeep of the drive motor. For detailed specifications, refer to the motor manufacturer's operating instructions, enclosed. Drive units

7.2.12 Overview of diesel engine

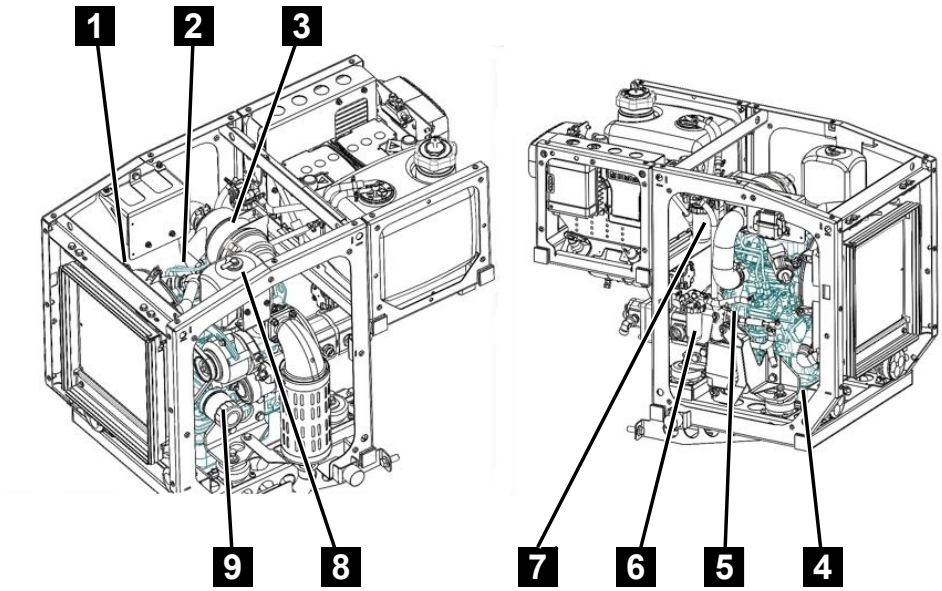

Fig. 218

1	Radiator pressure flap	6	Fuel filter
2	Oil filler neck	7	Water separator
3	Air cleaner box	8	Coolant reserve tank
4	Oil drain plug	9	Oil filter
5	Oil dipstick		

7.2.13 Lubricating the machine

All lubrication points on the machine must be cleaned and lubricated with the specified lubricants according to the maintenance schedule.

Never use high-pressure cleaners or chemical cleaning agents when cleaning the lubrication points.

7.3 General maintenance schedule

= checking	= lubricating	= changing = changing recommended	= cleaning	= tightening	adjusting	= documented inspection

When replacing hydraulic hoses or opening the hydraulic system Strike out what does not apply.

	As necessary and once a year	After the first 50 Bh	Every 50 Bh	Every 150 Bh	Every 800 Bh	Every 6 years	Every 10 years
Crawler chassis							
Chain tensioning	■ 🔧						
Profile	■				■		
Gearbox oil					■		
Sliding surfaces	■ ■				■ ■		
Guide rollers and deflection rollers	■						
Attachment of crawler chassis	■						
Hydraulic components free of leaks	■						
Chassis							
Articulated joints		■		■	■		
Hydraulic oil Check before every use	■*				■		
Hydraulic filter intake filter Check before every use	■* ■*				■		
Hydraulic filter return filter Check before every use	■* ■*				■		
Chassis pressures					■ 🔧		
Outrigger function pressures					■ 🔧		
Platform function pressures					■ 🔧		
Hydraulic hoses				■	■	▮▮	
Electrical switches and sensors	🔧				■		
Bracing	■						
Bracing locking pins	■						
Function of valves for emergency control	■						
Control box	■						

	As necessary and once a year	After the first 50 Bh	Every 50 Bh	Every 150 Bh	Every 800 Bh	Every 6 years	Every 10 years
Turntable							
Articulated joints							
Rotating assembly							
Rotating assembly screws							
Electrical switches and sensors							
Main control box							
Profiles							
Articulated joints							
Sliding surfaces							
Hydraulic hoses							
Energy supply chains							
Retraction and extension ropes							
Retraction and extension chains							
Electrical switches and sensors							
Hydraulic components free of leaks							
Basket/load boom							
Articulated joints							
Levelling cylinder							
Platform/load slewing motor screws							
Load handling							
Load scale							
Working basket							
Working basket							
Attachment points							
Control head							
Sockets (working basket)							
Lifting device							
Fastening parts							
Crane hook							

	As necessary and once a year	After the first 50 Bh	Every 50 Bh	Every 150 Bh	Every 800 Bh	Every 6 years	Every 10 years
Function check							
Emergency controls for the entire machine	■						
All functions of the control units	■						
General							
Annual maintenance performed as per check list (see inspection log)	■				■		
Electrical switches and sensors	■						
Hydraulic hoses and cables on moving points	■						
Hydraulic hoses						■ ▮▮	
Hydraulic components free of leaks	■						
Frame and weld seams	■						
Dielectric test							
Dielectric test	■						
Drive unit							
For instructions on performing maintenance work on the drive unit, see the operating instructions provided by the manufacturer Drive units.							
Documentation							
Type plate	■						
Operating instructions in working basket	■						
Adhesive labels on entire machine	■						

■ = checking	■ = lubricating	■ = changing ▮▮ = changing recommended	◢ = cleaning	■ = tightening	adjusting	■ = documented inspection

When replacing hydraulic hoses or opening the hydraulic system Strike out what does not apply.

NOTICE

Observe the specified consumables for maintenance.

8 Faults

The following section describes possible causes of faults and the work to eliminate them. If malfunctions occur repeatedly, the maintenance intervals should be shortened according to the actual load conditions. In case of faults which cannot be eliminated using the following instructions, contact the manufacturer, see contact data on page 2.

8.1 Safety instructions for fault clearance

Electric power

⚠ DANGER

Risk to life due to electric current!

Contact with live components can cause fatal injuries. Activated electrical components can perform uncontrolled movements and cause serious injuries.

– Before starting work, switch off the voltage supply and secure it to prevent any restart.

Securing to prevent restart

⚠ WARNING

Risk of fatal injury from unauthorised restart!

An unauthorised restart of the power supply during troubleshooting poses a risk of serious injuries and death to persons in the danger zone.

– Before starting work, switch off all power supplies and secure them to prevent restart.

Incorrectly performed troubleshooting work

⚠ WARNING

Risk of injury due to incorrect troubleshooting!

Incorrectly performed troubleshooting work can result in serious injuries.

– Ensure there is sufficient space for assembly before starting work.
– Make sure the assembly location is tidy and clean! Components and tools that are stacked loosely or lying around pose a risk of accident.
– Do not loosen connections sealed with yellow sealing wax.
– If components are removed, ensure correct reassembly, reinstall all mounting elements, and follow the torque settings Rotating assembly tightening torques.
– Observe the following before putting the machine back into service:

  ⇨ Make sure that all troubleshooting work was performed and completed in line with the specifications and notes in this manual.

  ⇨ Make sure that there are no people in the danger zone.

⇨ Make sure that all covers and safety devices are installed and are working correctly.

Moving parts

⚠ WARNING

Danger of injury due to moving parts!

Components with rotating and/or linear movements can cause serious injuries.

– Before performing any troubleshooting work on moving parts, switch off the machine and secure it against restart. Wait until all components have come to a standstill.
– When in the danger zone, wear close-fitting protective clothing with a low tear strength.

Exhaust gases

⚠ WARNING

Risk of fatal injury due to suffocation and poisoning from exhaust gases

Upon inhalation, exhaust gases can lead to suffocation, cause severe poisoning and bring about severe injuries to the respiratory tract.

– Always ensure fresh air supply when working on the machine in diesel engine mode.
– If exhaust gases are inhaled, take the affected person into an area with fresh air and call a doctor immediately.

Hot surfaces

⚠ WARNING

Risk of injury from hot surface!

The surfaces of motor components can become very hot during operation. Skin contact with the hot surfaces will cause serious burns to the skin.

– Avoid contact with hot motor components such as the exhaust system, radiator, hoses and motor block.
– Before performing any work on motor components, check whether they are hot. Allow them to cool down if necessary.

Hot lubricants

⚠ WARNING

Risk of injury from hot lubricants!

Consumables (coolants, motor oil or hydraulic oil) can reach high temperatures during operation. Skin contact with the hot consumables will cause serious burns to the skin.

– Avoid contact with hot lubricants.
– Before performing any work on consumables, check whether they are hot. Allow them to cool down if necessary.

Batteries

⚠ WARNING

Risk of injury through improper handling of batteries!

Improper handling of batteries may cause them to explode or to leak harmful fluids. Skin contact with these fluids can cause chemical burns. Ingestion can cause severe poisoning. Eye contact can result in permanent blindness.

– Never short-circuit a battery's contacts (positive and negative terminals).
– Never use or store batteries in areas subject to potentially explosive atmospheres or where temperatures could become high.
– Never try to solder, repair, modify, convert or disassemble batteries.
– Always keep batteries out of reach of unauthorised persons.
– To prevent fire, overheating, explosion or battery fluid leaks, always protect batteries from hard impacts, high weight loads and any other harmful effects. Leaked fluid may combust.
– Avoid contact with leaked fluid.

Measures after contact with battery fluid:

- Wash skin that has come into contact with battery fluid with plenty of water and soap.
- In the event of eye contact, immediately rinse the eye, including under the eyelid, with clean water for at least 15 minutes. Direct a soft stream of water directly into the eye, do not rub. Seek medical attention immediately.

Antifreeze agent

⚠ WARNING

Health hazard due to antifreeze agent!

The coolant of the diesel engine consists of a mixture of water and antifreeze agent. Antifreeze agent can cause serious damage to health if touched, swallowed or inhaled.

– Avoid contact with the antifreeze agent.
– Do not eat, drink or smoke when handling antifreeze agent. Wash your hands before breaks and when you finish work.
– Wear protective gloves when working with antifreeze agent.

Measure after contact with antifreeze agent:

– After skin contact, wash the affected areas with plenty of water.
– After contact with the eyes, rinse them thoroughly with plenty of water for at least 15 minutes and consult a physician.
– After swallowing, rinse with water and then drink plenty of water. Consult a physician.
– Go outside in the fresh air after inhaling aerosols.

Motor oil

⚠ WARNING

Risk of injury from motor oil!

Motor oil contains toxic substances that can cause inflammations and are carcinogenic.

– Avoid any skin contact with motor oil.
– In the event of inadvertent skin contact, immediately wash the affected areas with soap. Never use petroleum ether, solvents or other chemical detergents.

Behaviour in the event of faults

The following basic rules apply:

1. In case of faults which represent an immediate risk to personnel or objects of material value, immediately trigger an emergency stop.
2. Determine the cause of the fault.
3. When carrying out fault clearance which requires tasks to be performed in the danger zone, switch off the machine and secure it to prevent it from being switched back on. Inform the responsible party at the location of use of the fault immediately.
4. Depending on the type of fault, have it remedied by authorised qualified personnel.

NOTICE

The following fault table provides information on who is authorised to clear the fault.

8.2 Fault table

NOTICE

If the fault is not included in the table below, or if it cannot be remedied using the measures described, contact the manufacturer (see page 2 for contact details).

NOTICE

In addition to the table below, observe the operating instructions for the drive units.

Fault description	Cause	Remedy	Personnel
Diesel engine not working	Fuel tank empty.	Fill the fuel tank.	Trained persons
	Safety equipment has triggered (fuse, FI circuit breaker).	Check the safety equipment and re-activate or replace as necessary.	Trained persons
	Starter battery flat.	Charge the starter battery.	Trained persons
	Emergency stop button pressed.	Release the emergency stop button.	Trained persons
Machine not working with voltage supply from construction site feed	Safety equipment has triggered (fuse, FI circuit breaker).	Check the safety equipment and re-activate or replace as necessary.	Trained persons
	Extension cable faulty.	Replace the extension cable.	Trained persons
	Incorrect cable cross-section or incorrect cable length.	Adhere to permissible cable length(s) and cross-sections.	Trained persons
	Emergency stop button pressed.	Release the emergency stop button.	Trained persons
Boom function not available from platform	Emergency stop button pressed.	Release the emergency stop button.	Trained persons
	Stabilisation not correct.	Stabilise the machine correctly.	Trained persons
The crawler tracks cannot be driven.	The function selection switch on the radio remote control is set incorrectly.	Set the function selection switch to the “Crawler function” position.	Trained persons
	Safety equipment has triggered (fuse, FI circuit breaker).	Check the safety equipment and re-activate or replace as necessary.	Trained persons
Stabilisation not possible	The function selection switch on the radio remote control is set incorrectly.	Set the function selection switch to the “outrigger” position.	Trained persons
	Machine not in transport position.	Move the machine into the transport position.	Trained persons
	Safety equipment has triggered (fuse, FI circuit breaker).	Check the safety equipment and re-activate or replace as necessary.	Trained persons
Boom function not working	The function selection switch on the radio remote control is set incorrectly.	Set the function selection switch to the “Boom” position.	Trained persons
	Emergency stop button pressed.	Release the emergency stop button.	Trained persons
	Stabilisation not correct.	Check the stabilisation.	Trained persons
	There is no supply voltage/ the supply voltage is too low.	Check the voltage supply.	Qualified electrician
	Safety equipment has triggered (fuse, FI circuit breaker).	Check the safety equipment and re-activate or replace as necessary.	Trained persons
The upper boom does not telescope out.	The upper boom is in the transport support.	Raise the upper boom out of the transport support.	Trained persons
	Safety equipment has triggered (fuse, FI circuit breaker).	Check the safety equipment and re-activate or replace as necessary.	Trained persons
Pivoting is not possible	The upper boom is still in the transport support.	Raise the upper boom out of the transport support.	Trained persons

Fault description	Cause	Remedy	Personnel
	Safety equipment has triggered (fuse, FI circuit breaker).	Check the safety equipment and re-activate or replace as necessary.	Trained persons
Green lamp on the radio remote control flashing	Stabilisation not correct.	Check the stabilisation.	Trained persons
Red lamp on the radio remote control continuously lit	The operating lever has been shifted during the start-up process.	Press the emergency stop button and unlock it again. Restart the control unit.	Trained persons
	System error.	Call service.	Trained persons
Red lamp on the radio remote control flashing	Platform tilted more than ± 5°.	Align the platform using the control valves (emergency operation).	Trained persons
Motor pump runs and stalls	The hydraulic hose is bent.	Check the hydraulic hoses.	Qualified personnel
Motor pump runs and stalls	Pressure filter soiled.	Replace the filter insert.	Qualified personnel
Motor pump is running but there is no pressure in the system	The hand wheel on the hand pump has come loose.	Close hand wheel clockwise.	Trained persons
Cylinder lowers by itself	Hydraulic system faulty.	Shut down machine immediately and call the service department.	Trained persons
Loud motor pump noise; movements slow down and then stop	Not enough hydraulic oil in the tank; hydraulic system leaking.	Check the hydraulic oil level and top up if necessary. Call service.	Trained persons
The socket in the platform has no voltage	The mains power supply has been interrupted.	Check the mains power supply.	Qualified electrician
The socket in the platform has no voltage	Plug not in the socket.	Plug in the plug.	Trained persons
	Safety equipment has triggered.	Check the fuses.	Trained persons
Heavy wear on the crawler track	Drive ring severely worn.	Call service.	Trained persons
Steel wires on the crawler tracks broken	Excessive tension on the crawler tracks due to trapped stones, abrupt swerving on a rough surface, faulty spring set, frozen material between the rollers.	Call service.	Trained persons

8.3 Fuse assignment

Overview of fuses

The fuses are located at the following positions on the machine:

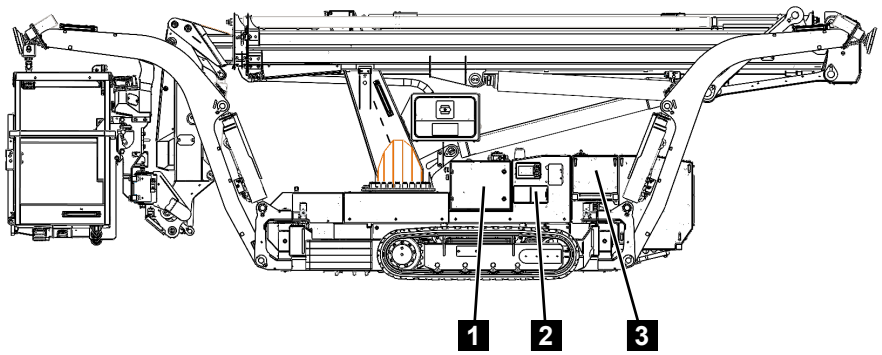

Fig. 219

Position	
1	Chassis control box
2	RC circuit breaker
3	Drive unit control box

The values of the fuses can be found on the circuit diagrams.

8.4 Notes about the crawler track

Damage

During operation, the crawler track is subject to normal wear. The following table illustrates a number of damage types.

Damage	Possible cause	Note
Cracks in the profile	■ Hard use in the field. ■ Crossing sharp-edged or high hurdles. ■ With old, rarely used chains, material fatigue due to bending stress may occur.	No compromise of operation.
Cracks on the outside flanks	■ Hard use in the field. ■ Crossing sharp-edged or high hurdles.	No compromise of operation.
Cracks on the inside by the metal core	■ Various causes.	No compromise of operation.
Wear of the metal core	■ Normal wear from drive wheel cams. ■ Increased wear from use on very sandy ground.	Observe chain tensioning. The metal core can become bent by great wear. This can cause breaks with progressive wear. Change crawler tracks early.
Profile wear	■ Normal appearance. ■ Depending on the area of application, arises sooner or later.	Depending on the area of application, the crawler tracks may need to be replaced earlier. Essentially, however, can be moved until there is no more profile.

Remedies

- Brief daily visual inspection.
- Careful moving in swampy ground, especially when slowing down.
- In case of palpable resistance, first determine the cause. Do not drive onwards using force.
- Use care when driving on impassable and hilly land, especially when slowing down.
- Perform steering manoeuvres with the necessary caution.
- Clean crawler chassis after completing work.
- If there is a risk of frost, clean the drive and track inside by driving on clean ground. Then place the machine on wooden boards.

8.5 Information messages

Information messages are displayed on the graphic display screen on the control panel and on the display screen in the chassis.

9 Disposal

Electric power

⚠ DANGER

Risk to life due to electric current!

Contact with live components can cause fatal injuries. Activated electrical components can perform uncontrolled movements and cause serious injuries.

– Before starting work, switch off the voltage supply and secure it to prevent any restart.

If no separate return or disposal agreements have been concluded, recycle dismantled components:

- Dispose of all fluids in an environmentally sound manner.
- Scrap all metals.
- Recycle plastic elements.
- Sort and dispose of remaining components in based on their material properties.

Environmental protection

Environmental hazard through improper disposal!

Improper disposal can cause damage to the environment.

– Have electrical and electronic components, lubricants and other auxiliary media disposed of by professionals.

– If in doubt, consult the local authorities or specialist disposal companies as to environmentally sound disposal.

10 Appendix

10.1 Circuit diagram 184
10.2 Hydraulics diagram 186
10.3 Adhesive label folder 188
10.4 Drive units 190
10.4.1 Combustion engine (diesel) 190
10.4.2 Combustion engine (petrol) 233
10.5 Accessories documentation 235
10.5.1 Handrail guard on the platform 235
10.5.2 TEUPEN operator protection system 235
10.5.3 Monitoring of the platform ladder 236
10.5.4 Flashing lights on the platform 237
10.5.5 Strobe lights under the platform 237
10.5.6 Flashing lights on outriggers 238
10.5.7 Flashing lights on the turntable 238
10.5.8 GRP platform 239

10.1 Circuit diagram

10.2 Hydraulics diagram

10.3 Adhesive label folder

10.4 Drive units

10.4.1 Combustion engine (diesel)

KUBOTA

U.S.A. : **KUBOTA ENGINE AMERICA CORPORATION**
505 Schelter Road, Lincolnshire, Illinois 60069 U.S.A.
Telephone : (847)955-2500

Canada : **KUBOTA CANADA LTD.**
5900 14th Avenue, Markham, Ontario, L3S 4K4, Canada
Telephone : (905)294-7477

France : **KUBOTA EUROPE S.A.S**
19-25, Rue Jules Vercruysse, Z.I. BP88, 95101 Argenteuil Cedex, France
Telephone : (33)1-3426-3434

Italy : **KUBOTA EUROPE S.A.S Italy Branch**
Via Grandi, 29 20068 Peschiera Borrome (MI) Italy
Telephone : (39)02-51650377

Germany : **KUBOTA (DEUTSCHLAND) GmbH**
Senefelder Str. 3-5 63110 Rodgau /Nieder-Roden, Germany
Telephone : (49)6106-873-0

U.K. : **KUBOTA (U.K.) LTD.**
Dormer Road, Thame, Oxfordshire, OX9 3UN, U.K.
Telephone : (44)1844-214500

Australia : **KUBOTA AUSTRALIA PTY LTD.**
25-29 Permas Way, Truganina, VIC 3029, Australia
Telephone : (61)-3-9394-4400

Malaysia : **KUBOTA MALAYSIA SDN. BHD.**
Lot 766, Jalan Subang 4, off Persiaran Subang Sungai Penaga Industrial Park, 47500 Subang Jaya
Telephone : (60)-3-7890-3533

Philippines : **KUBOTA PHILIPPINES, INC.**
232 Quirino Highway, Baesa, Quezon City 1106, Philippines
Telephone : (63)2-422-3500

Indonesia : **P.T. KUBOTA INDONESIA**
Taman Industri Bukit Semarang Baru(BSB) Blok D.1 Kav.8, Kel. Jatibarang-Kec.Mijen, Semarang, Indonesia
Telephone : (62)-24-7472849

Japan : **KUBOTA Corporation**
Engine Export Dept.
2-47, Shikitsuhigashi 1-chome, Naniwa-ku, Osaka, Japan 556-8601
Telephone : (81)6-6648-2155 Fax : (81)6-6648-3521

Code No. 1J323-8915-1

Z482-E4·Z602-E4·D722-E4·D782-E4·D902-E4·D902-T-E4

ENGLISH

中文

OPERATOR'S MANUAL

KUBOTA DIESEL ENGINE

使用说明书

久保田柴油发动机

Z482-E4·Z602-E4
D722-E4·D782-E4
D902-E4·D902-T-E4

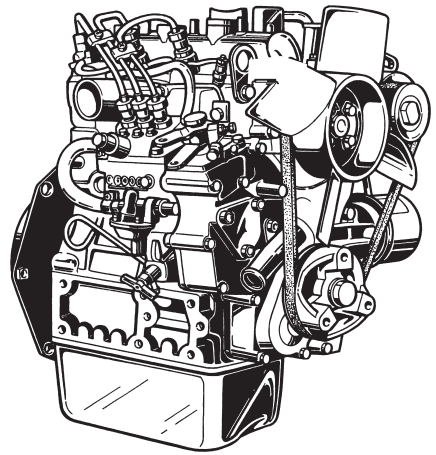

1ABAAAAAP1560

© 2022 Kubota Corporation

PRINTED WITH SOY INK

READ AND SAVE THIS BOOK

请务必仔细阅读并妥善保管该说明书

Kubota

California Proposition 65

⚠ WARNING ⚠

Engine exhaust, some of its constituents, certain vehicle components and fluids, contain or emit chemicals known to the State of California to cause cancer and birth defects or other reproductive harm.

ENGLISH

OPERATOR'S MANUAL

KUBOTA
DIESEL ENGINE

MODELS Z482-E4·Z602-E4
D722-E4·D782-E4
D902-E4·D902-T-E4

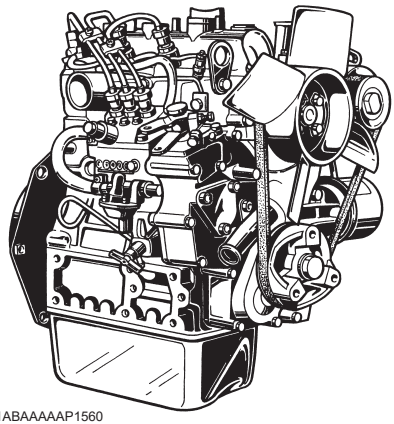

1ABAAAAAP1560

1J323-8915-1

READ AND SAVE THIS BOOK

Kubota

ENGLISH

FOREWORD

You are now the proud owner of a KUBOTA Engine. This engine is a product of KUBOTA quality engineering and manufacturing. It is made of fine materials and under a rigid quality control system. It will give you long, satisfactory service. To obtain the best use of your engine, please read this manual carefully. It will help you become familiar with the operation of the engine and contains many helpful hints about engine maintenance. It is KUBOTA's policy to utilize as quickly as possible every advance in our research. The immediate use of new techniques in the manufacture of products may cause some small parts of this manual to be outdated. KUBOTA distributors and dealers will have the most up-to-date information. Please do not hesitate to consult with them.

SAFETY FIRST

This symbol, the industry's "Safety Alert Symbol", is used throughout this manual and on labels on the machine itself to warn of the possibility of personal injury. Read these instructions carefully. It is essential that you read the instructions and safety regulations before you attempt to assemble or use this unit.

DANGER :	Indicates an imminently hazardous situation which, if not avoided, will result in death or serious injury.
WARNING :	Indicates a potentially hazardous situation which, if not avoided, could result in death or serious injury.
CAUTION :	Indicates a potentially hazardous situation which, if not avoided, may result in minor or moderate injury.
IMPORTANT :	Indicates that equipment or property damage could result if instructions are not followed.
NOTE :	Gives helpful information.

ENGLISH

CONTENTS

⚠SAFE OPERATION 1

SERVICING OF THE ENGINE 1

NAMES OF PARTS 2

PRE-OPERATION CHECK 3
- BREAK-IN 3
- DAILY CHECK 3

OPERATING THE ENGINE 4
- STARTING THE ENGINE(NORMAL) 4
- COLD WEATHER STARTING 5
- STOPPING THE ENGINE 6
- CHECKS DURING OPERATION 6
  - Radiator Cooling water(Coolant) 6
  - Oil pressure lamp 6
  - Fuel 6
  - Color of exhaust 6
  - Immediately stop the engine if; 6
- REVERSED ENGINE REVOLUTION AND REMEDIES 7
  - How to tell when the engine starts running backwards 7
  - Remedies 7
- EMISSION CONTROL SYSTEM 7
- PRECAUTIONS ON GENERATOR-EQUIPPED ENGINE 7

MAINTENANCE 8
- SERVICE INTERVALS 9

PERIODIC SERVICE 12
- FUEL 12
  - Fuel level check and refueling 12
  - Air bleeding the fuel system 13
  - Checking the fuel pipes 13
  - Cleaning the fuel filter pot 14
- ENGINE OIL 14
  - Checking level and adding engine oil 14
  - Changing engine oil 15
  - Replacing the oil filter cartridge 16
- RADIATOR 16
  - Checking coolant level, adding coolant 16
  - Changing coolant 17
  - Checking radiator hoses and clamp bands 18
  - Precaution at overheating 18
  - Cleaning radiator core (outside) 18
  - Cleaning the radiator (inside) 18
  - Anti-freeze 18
- AIR CLEANER 19
- ELECTRIC WIRING 20
- FAN BELT 20
  - Adjusting Fan Belt Tension 20
- TURBO-CHARGER 20

CARRIAGE AND STORAGE 21

ENGLISH

CARRIAGE 21
STORAGE 21
TROUBLESHOOTING 22
SPECIFICATIONS 24
WIRING DIAGRAMS 27

SAFE OPERATION

Careful operation is your best assurance against an accident. Read and understand this section carefully before operating the engine. All operators, no matter how much experience they may have, should read this and other related manuals before operating the engine or any equipment attached to it. It is the owner's obligation to provide all operators with this information and instruct them on safe operation.

Be sure to observe the following for safe operation.

1. OBSERVE SAFETY INSTRUCTIONS

- Read and understand carefully this "OPERATOR'S MANUAL" and "LABELS ON THE ENGINE" before attempting to start and operate the engine.
- Learn how to operate and work safely. Know your equipment and its limitations. Always keep the engine in good condition.
- Before allowing other people to use your engine, explain how to operate and have them read this manual before operation.
- DO NOT modify the engine. UNAUTHORIZED MODIFICATIONS to the engine may impair the function and/or safety and affect engine life. If the engine does not perform properly, consult your local Kubota Engine Distributor first.



1AAACAAAP008B

2. WEAR SAFE CLOTHING AND PERSONAL PROTECTIVE EQUIPMENT (PPE)

- DO NOT wear loose, torn or bulky clothing around the machine that may catch on working controls and projections or into fans, pulleys and other moving parts causing personal injury.
- Use additional safety items-PPE, e.g. hard hat, safety protection, safety goggles, gloves, etc., as appropriate or required.
- DO NOT operate the machine or any equipment attached to it while under the influence of alcohol, medication, or other drugs, or while fatigued.
- DO NOT wear radio or music headphones while operating the engine.


1AEAAAAAP0130

3. CHECK BEFORE STARTING & OPERATING THE ENGINE

- Be sure to inspect the engine before operation. Do not operate the engine if there is something wrong with it. Repair it immediately.
- Ensure all guards and shields are in place before operating the engine. Replace any that are damaged or missing.
- Check to see that you and others are a safe distance from the engine before starting.
- Always keep the engine at least 3 feet (1 meter) away from buildings and other facilities.
- DO NOT allow children or livestock to approach the machine while the engine is running.
- DO NOT start the engine by shorting across starter terminals. The machine may start in gear and move. Do not bypass or defeat any safety devices.



1BAABADAP0010

4. KEEP THE ENGINE AND SURROUNDINGS CLEAN

- Be sure to stop the engine before cleaning.
- Keep the engine clean and free of accumulated dirt, grease and trash to avoid a fire. Store flammable fluids in proper containers and cabinets away from sparks and heat.
- Check for and repair leaks immediately.
- DO NOT stop the engine without idling; Allow the engine to cool down, first. Keep the engine idling for about 5 minutes before stopping unless there is a safety problem that requires immediate shut down.

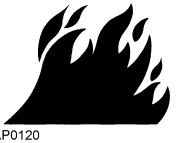

1AEAAAAAP0120

5. SAFE HANDLING OF FUEL AND LUBRICANTS -KEEP AWAY FROM FIRE

- Always stop the engine before refueling and/or lubricating.
- DO NOT smoke or allow flames or sparks in your work area. Fuel is extremely flammable and explosive under certain conditions.
- Refuel at a well ventilated and open place. When fuel and/or lubricants are spilled, refuel after letting the engine cool down.
- DO NOT mix gasoline or alcohol with diesel fuel. The mixture can cause a fire or severe engine damage.
- Do not use unapproved containers e.g. buckets, bottles, jars. Use approved fuel storage containers and dispensers.



1AAACAAAP001A

6. EXHAUST GASES & FIRE PREVENTION

- Engine exhaust fumes can be very harmful if allowed to accumulate. Be sure to run the engine in a well ventilated location and where there are no people or livestock near the engine.
- The exhaust gas from the muffler is very hot. To prevent a fire, do not expose dry grass, mowed grass, oil or any other combustible materials to exhaust gas. Keep the engine and muffler clean at all times.
- To avoid a fire, be alert for leaks of flammable substances from hoses and lines. Be sure to check for leaks from hoses or pipes, such as fuel and hydraulic fluid by following the maintenance check list.
- To avoid a fire, do not short across power cables and wires. Check to see that all power cables and wirings are in good condition. Keep all electrical connections clean. Bare wire or frayed insulation can cause a dangerous electrical shock and personal injury.



7. ESCAPING FLUID

- Relieve all pressure in the air, the oil and the cooling systems before disconnecting any lines, fittings or related items.
- Be cautious of possible pressure relief when disconnecting any device from a pressurized system that utilizes pressure. DO NOT check for pressure leaks with your hand. High pressure oil or fuel can cause personal injury.
- Escaping fluid under pressure has sufficient force to penetrate skin causing serious personal injury.
- Fluid escaping from pinholes may be invisible. Use a piece of cardboard or wood to search for suspected leaks: do not use hands and body. Use safety goggles or other eye protection when checking for leaks.
- If injured by escaping fluid, see a medical doctor immediately. This fluid can produce gangrene or severe allergic reaction.

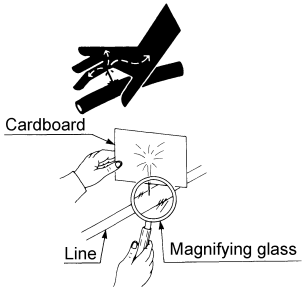

1ABAAAAAP120F

8. CAUTIONS AGAINST BURNS & BATTERY EXPLOSION

- To avoid burns, be cautious of hot components, e.g. muffler, muffler cover, radiator, hoses, engine body, coolants, engine oil, etc. during operation and after the engine has been shut off.
- DO NOT remove the radiator cap while the engine is running or immediately after stopping. Otherwise hot water will spout out from the radiator. Wait until the radiator is completely cool to the touch before removing the cap. Wear safety goggles.
- Be sure to close the coolant drain valve, secure the pressure cap, and fasten the pipe band before operating. If these parts are taken off, or loosened, it will result in serious personal injury.
- The battery presents an explosive hazard. When the battery is being charged, hydrogen and oxygen gases are extremely explosive.
- DO NOT use or charge the battery if its fluid level is below the LOWER mark.
  Otherwise, the component parts may deteriorate earlier than expected, which may shorten the service life or cause an explosion. Immediately, add distilled water until the fluid level is between the UPPER and LOWER marks.
- Keep sparks and open flames away from the battery, especially during charging. DO NOT strike a match near the battery.
- DO NOT check the battery charge by placing a metal object across the terminals. Use a voltmeter or hydrometer.
- DO NOT charge a frozen battery. There is a risk of explosion. When frozen, warm the battery up to at least 16°C (61°F).



1AEABAAAP0080



1AAAAABAP0230



1ARAEAAAP0520

9. KEEP HANDS AND BODY AWAY FROM ROTATING PARTS

- Be sure to stop the engine before checking or adjusting the belt tension and cooling fan.
- Keep your hands and body away from rotating parts, such as the cooling fan, V-belt, fan drive pulley or flywheel. Contact with rotating parts can cause severe personal injury.
- DO NOT run the engine without safety guards. Install safety guards securely before operation.

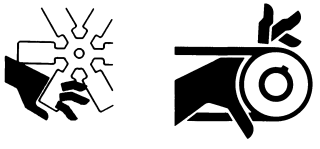

1ABAAAAAP1470

10. ANTI-FREEZE & DISPOSAL OF FLUIDS

- Anti-freeze contains poison. Wear rubber gloves to avoid personal injury. In case of contact with skin, wash it off immediately.
- DO NOT mix different types of Anti-freeze. The mixture can produce a chemical reaction causing harmful substances. Use approved or genuine KUBOTA Anti-freeze.
- Be mindful of the environment and the ecology. Before draining any fluids, determine the correct way to dispose of them. Observe the relevant environmental protection regulations when disposing of oil, fuel, coolant, brake fluid, filters and batteries.
- When draining fluids from the engine, place a suitable container underneath the engine body.
- DO NOT pour waste onto the ground, down a drain, or into any water source. Dispose of waste fluids according to environmental regulations.

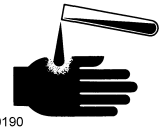

1BJABAAAP0190

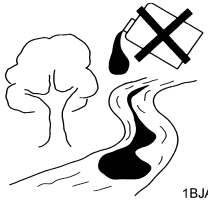

1BJABAAAP0180

11. CONDUCTING SAFETY CHECKS & MAINTENANCE

- When inspecting the engine or servicing, place the engine on a large flat surface. DO NOT work on anything that is supported ONLY by lift jacks or a hoist. Always use blocks or the correct stands to support the engine before servicing.
- Disconnect the battery from the engine before conducting service. Put a "DO NOT OPERATE!" tag on the key switch to avoid accidental starting.
- To avoid sparks from an accidental short circuit always disconnect the battery's ground cable (-) first and reconnect it last.
- Be sure to stop the engine and remove the key when conducting daily and periodic maintenance, service and cleaning.
- Check or conduct maintenance after the engine, coolant, muffler, or muffler cover have cooled off completely.
- Always use the appropriate tools and fixtures. Verify that they are in good condition before performing any service work. Make sure you understand how to use them before service.
- Use ONLY correct engine barring techniques for manually rotating the engine. DO NOT attempt to rotate the engine by pulling or prying on the cooling fan and V-belt. This practice can cause serious personal injury or premature damage to the cooling fan and belt.

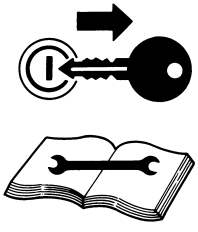

1BJABAAAP0200

- Replace fuel pipes and lubricant pipes with their hose clamps every 2 years or earlier whether they are damaged or not. They are made of rubber and age gradually.
- When servicing is performed together by two or more persons, take care to perform all work safely.
- Keep a first aid kit and fire extinguisher handy at all times.

12. WARNING AND CAUTION LABELS

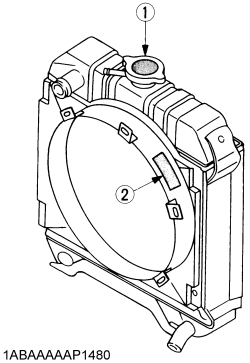

1ABAAAAAP1480

① Part No.19077-8724-1 or 16667-8724-1 (55mm in diameter) (37mm in diameter)



1ABACAAAP036K

② Part No.TA040-4957-1
Do not get your hands close to engine fan and fan belt.


1AGAMAAAP2620

13. CARE OF WARNING AND CAUTION LABELS

1. Keep warning and caution labels clean and free from obstructing material.
2. Clean warning and caution labels with soap and water, dry with a soft cloth.
3. Replace damaged or missing warning and caution labels with new labels from your local KUBOTA dealer.
4. If a component with warning and caution label(s) affixed is replaced with a new part, make sure the new label(s) is (are) attached in the same location(s) as the replaced component.
5. Mount new warning and caution labels by applying to a clean dry surface and pressing any bubbles to the outside edge.

SERVICING OF THE ENGINE

Your dealer is interested in your new engine and has the desire to help you get the most value from it. After reading this manual thoroughly, you will find that you can do some of the regular maintenance yourself.
However, when in need of parts or major service, be sure to see your KUBOTA dealer.
For service, contact the KUBOTA Dealership from which you purchased your engine or your local KUBOTA dealer.
When in need of parts, be prepared to give your dealer the engine serial number.
Locate the serial number now and record them in the space provided.

	Type	Serial No.
Engine		
Date of Purchase		
Name of Dealer		
(To be filled in by purchaser)		

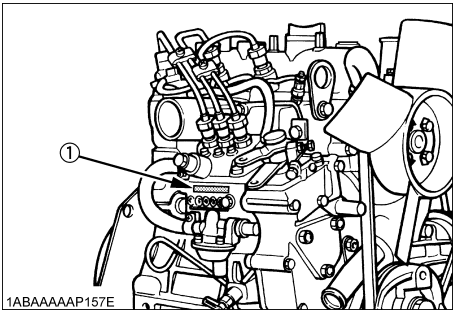

(1) Engine serial number

NAMES OF PARTS

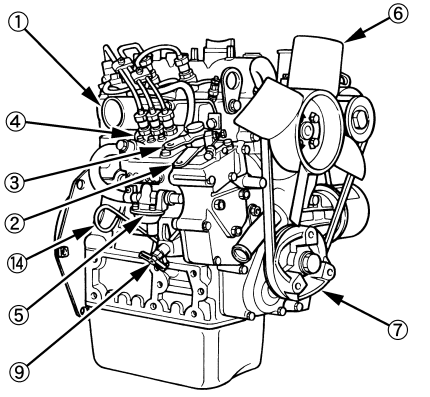

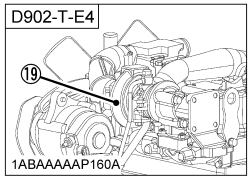

1ABAAAAAP160A

1ABAAAAAP157H

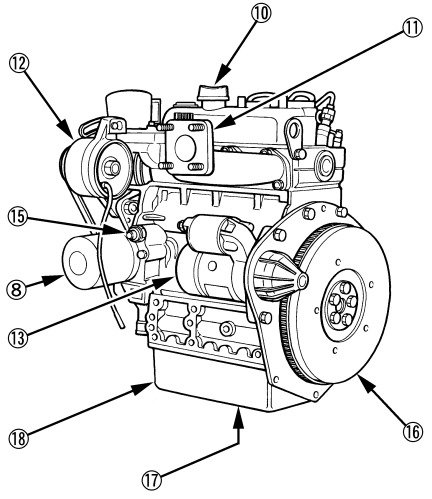

1ABAAAAAP158E

(1) Intake manifold
(2) Speed control lever
(3) Engine stop lever
(4) Injection pump
(5) Fuel feed pump
(6) Cooling fan
(7) Fan drive pulley
(8) Oil filter cartridge
(9) Water drain cock
(10) Oil filler plug
(11) Exhaust manifold
(12) Alternator
(13) Starter
(14) Oil level gauge
(15) Oil pressure switch
(16) Flywheel
(17) Oil drain plug
(18) Oil pan
(19) Turbo-charger (D902-T-E4)

PRE-OPERATION CHECK

BREAK-IN

During the engine break-in period, observe the following by all means:

1. Change engine oil and oil filter cartridge after the first 50 hours of operation. (See "ENGINE OIL" in "PERIODIC SERVICE" section.)
2. When ambient temperature is low, operate the machine after the engine has been completely warmed up.

DAILY CHECK

To prevent trouble from occurring, it is important to know the conditions of the engine well. Check it before starting.

WARNING

To avoid personal injury or death:

- **Be sure to install shields and safeguards attached to the engine when operating.**
- **Stop the engine at a flat and wide space when checking.**
- **Keep dust or fuel away from the battery, wiring, muffler and engine to prevent a fire. Check and clear them before operating everyday. Pay attention to the heat of the exhaust pipe or exhaust gas so that it can not ignite trash.**

Item		Ref. page
1. Parts which had trouble in previous operation		-
2. By walking around the machine	(1) Oil or water leaks	14 to 16
	(2) Engine oil level and contamination	14
	(3) Amount of fuel	12
	(4) Amount of coolant	16
	(5) Dust in air cleaner	19
	(6) Damaged parts and loosened bolts and nuts	-
3. By inserting the key into the starter switch	(1) Proper functions of meters and pilot lamps; no stains on these parts	-
	(2) Proper function of glow lamp timer	-
4. By starting the engine	(1) Color of exhaust fumes	6
	(2) Unusual engine noise	6
	(3) Engine start-up condition	5
	(4) Slow-down and acceleration behavior	6

OPERATING THE ENGINE

STARTING THE ENGINE(NORMAL)

WARNING

To avoid personal injury or death:

- **Do not allow children to approach the machine while the engine is running.**
- **Be sure to install the machine on which the engine is installed, on a flat place.**
- **Do not run the engine on gradients.**
- **Do not run the engine in an enclosed area. Exhaust gas can cause air pollution and exhaust gas poisoning.**
- **Keep your hands away from rotating parts (such as fan, pulley, belt, flywheel etc.) during operation.**
- **Do not operate the machine while under the influence of alcohol or drugs.**
- **Do not wear loose, torn or bulky clothing around the machine. It may catch on moving parts or controls, leading to the risk of accident. Use additional safety items, e.g. hard hat, safety boots or shoes, eye and hearing protection, gloves, etc., as appropriate or required.**
- **Do not wear radio or music headphones while operating engine.**
- **Check to see if it is safe around the engine before starting.**
- **Reinstall safeguards and shields securely and clear all maintenance tools when starting the engine after maintenance.**

IMPORTANT :

- Do not use ether or any starting fluid for starting the engine, or a severe damage will occur.
- When starting the engine after a long storage (of more than 3 months), first set the stop lever to the "STOP" position and then activate the starter for about 10 seconds to allow oil to reach every engine part.

1. Set the fuel lever to the "ON" position.

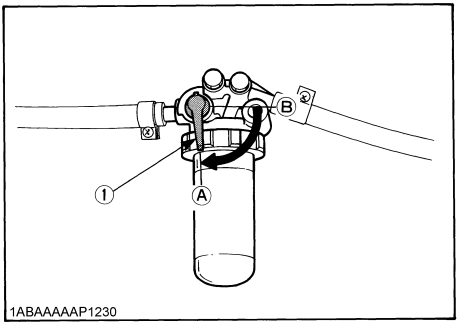

1ABAAAAAP1230

(1) Fuel lever (A) "ON" (B) "OFF"

2. Place the engine stop lever in the "START" position.

3. Place the speed control lever at more than half "OPERATION"

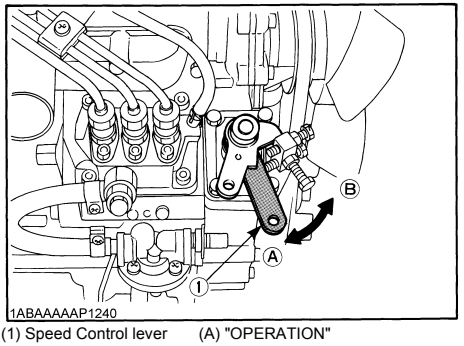

1ABAAAAAP1240

(1) Speed Control lever (A) "OPERATION" (B) "IDLING"

4. Insert the key into the key switch and turn it to the "OPERATION" position.

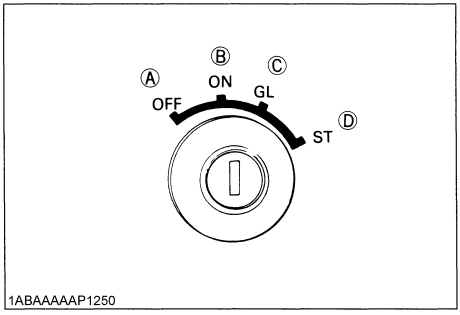

(A) "OFF" SWITCHED OFF
(B) "ON" OPERATION
(C) "GL" PREHEATING
(D) "ST" STARTING

5. Turn the starter switch to the "PREHEATING" position to allow the glow lamp to redden.

6. Turn the key to the "STARTING" position and the engine should start. Release the key immediately when the engine starts.

7. Check to see that the oil pressure lamp and charge lamp are off. If the lamps are still on, immediately stop the engine, and determine the cause.

(See "CHECKS DURING OPERATION" in "OPERATING THE ENGINE" section.)

NOTE :
- If the oil pressure lamp should be still on, immediately stop the engine and check;
  - if there is enough engine oil.
  - if the engine oil has dirt in it.
  - if the wiring is faulty.

8. Warm up the engine at medium speed without load.

IMPORTANT :
- If the glow lamp should redden too quickly or too slowly, immediately ask your KUBOTA dealer to check and repair it.
- If the engine does not catch or start at 10 seconds after the starter switch is set at "STARTING" position, wait for another 30 seconds and then begin the engine starting sequence again. Do not allow the starter motor to run continuously for more than 20 seconds.

COLD WEATHER STARTING

If the ambient temperature is below* -5°C(23°F) and the engine is very cold, start it in the following manner: Take steps (1) through (4) left.

5. Turn the key to the "PREHEATING" position and keep it there for a certain period mentioned below.

IMPORTANT :
- Shown below are the standard preheating times for various temperatures. This operation, however, is not required, when the engine is warmed up.

Ambient temperature	Preheating time	
	Ordinary heat type	With glow lamp timer
Above 10°C (50°F)	NO NEED	See NOTE:
10°C (50°F) to -5°C (23°F)	Approx. 5 seconds	
*Below -5°C (23°F)	Approx. 10 seconds	
Limit of continuous use	20 seconds	

NOTE :
- In case of installing standard glow lamp, glow lamp goes off after about 6 seconds, when the starter switch key is turned to the "PREHEATING" position. However if necessary, keep the starter switch key at the "PREHEATING" position for longer time, according to the left recommendation.

6. Turn the key to the "STARTING" position and the engine should start.

(If the engine fails to start after 10 seconds, turn off the key for 5 to 30 seconds. Then repeat steps (5) and (6).)

IMPORTANT :
- Do not allow the starter motor to run continuously for more than 20 seconds.
- Be sure to warm up the engine, not only in winter, but also in warmer seasons. An insufficiently warmed-up engine can shorten its service life.
- When there is fear of temperature dropping below -15°C (5°F) detach the battery from the machine, and keep it indoors in a safe area, to be reinstalled just before the next operation.

STOPPING THE ENGINE

1. **Return the speed control lever to low idle, and run the engine under idling conditions.**

IMPORTANT :
- Allow the engine to idle for 5 minutes before shutting it off after a full load operation.
  Failure to do so may lead to turbo-charger trouble.

2. **Set the engine stop lever to the "STOP" position.**
3. **With the starter switch placed to the "SWITCHED OFF" position, remove the key. (Be sure to return the engine stop lever to the "START" position to be ready for the next start.)**

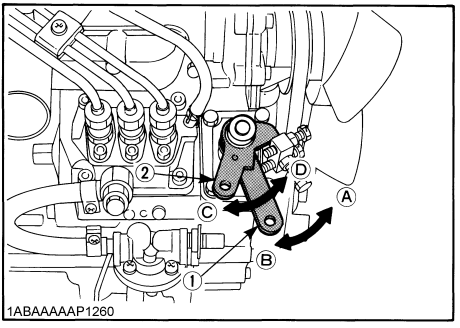

(1) Speed control lever
(2) Engine stop lever
(A) "IDLING"
(B) "OPERATION"
(C) "START"
(D) "STOP"

CHECKS DURING OPERATION

While running, make the following checks to see that all parts are working correctly.

■Radiator Cooling water(Coolant)

WARNING

To avoid personal injury or death:
- **Do not remove radiator cap until coolant temperature is well below its boiling point. Then loosen cap slightly to the stop position, to relieve any pressure, before removing cap completely.**

If the coolant temperature warning lamp lights up or if steam or coolant does not stop squirting from the radiator overflow pipe, turn off the load and **keep the engine idling (COOLING-DOWN) for at least 5 minutes** to let it cool down gradually. Then stop the engine and take the following inspection and servicing.

1. Check to see if the coolant runs short or if there is any coolant leak;
2. Check to see if there is any obstacle around the cooling air inlet or outlet;
3. Check to see if there is any dirt or dust between radiator fin and tube;
4. Check to see if the fan belt is too loose; and
5. Check to see if radiator water pipe is clogged.

■Oil pressure lamp

The lamp lights up to warn the operator that the engine oil pressure has dropped below the prescribed level. If this should happen during operation or should not go off even after the engine is accelerated more than 1000rpm, immediately stop the engine and check the following:

1. Engine oil level (See "ENGINE OIL" in "PERIODIC SERVICE" section.)

■Fuel

WARNING

To avoid personal injury or death:
- **Fluid escaping from pinholes may be invisible. Do not use hands to search for suspected leaks; Use a piece of cardboard or wood, instead. If injured by escaping fluid, see a medical doctor at once. This fluid can produce gangrene or a severe allergic reaction.**
- **Check any leaks from fuel pipes or fuel injection pipes. Use eye protection when checking for leaks.**

Be careful not to empty the fuel tank. Otherwise air may enter the fuel system, requiring fuel system bleeding. (See "FUEL" in "PERIODIC SERVICE" section.)

■Color of exhaust

While the engine is run within the rated output range:
- The color of exhaust remains colorless.
- If the output slightly exceeds the rated level, exhaust may become a little colored with the output level kept constant.
- If the engine is run continuously with dark exhaust emission, it may lead to trouble with the engine.

■Immediately stop the engine if;

- The engine suddenly slows down or accelerates.
- Unusual noises are suddenly heard.
- Exhaust fumes suddenly become very dark.
- The oil pressure lamp or the water temperature alarm lamp lights up.

REVERSED ENGINE REVOLUTION AND REMEDIES

WARNING

To avoid personal injury or death:

- **Reversed engine operation can make the machine reverse and run it backwards. It may lead to serious trouble.**
- **Reversed engine operation may make exhaust gas gush out into the intake side and ignite the air cleaner; It could catch fire.**

Reversed engine revolution must be stopped immediately since engine oil circulation is cut quickly, leading to serious trouble.

■How to tell when the engine starts running backwards

1. Lubricating oil pressure drops sharply. Oil pressure warning light, if used, will light.
2. Since the intake and exhaust sides are reversed, the sound of the engine changes, and exhaust gas will come out of the air cleaner.
3. A louder knocking sound will be heard when the engine starts running backwards.

■Remedies

1. Immediately set the engine stop lever to the "STOP" position to stop the engine.
2. After stopping the engine, check the air cleaner, intake rubber tube and other parts, and then replace parts as needed.

EMISSION CONTROL SYSTEM

- Operate, use and maintain the engine, including the emission control system in accordance with the instructions provided to the end users, so that the engine's emissions performance is kept within the requirements applicable to the engine's category.
- Do not deliberately tamper, or misuse, the engine emission control system, especially with regard to deactivating or not maintaining an exhaust gas recirculation (EGR) system or a reagent dosing system.
- When a warning indicator lights up, the engine is experiencing trouble, which may also cause problems in the emission control system. Take prompt action and rectify any incorrect operation, use, or maintenance of the emission control system in accordance with the rectification measures. (See "TROUBLESHOOTING" or, where applicable, "OPERATOR WARNING AND INDUCEMENT".

PRECAUTIONS ON GENERATOR-EQUIPPED ENGINE

WARNING

To avoid personal injury or death:

If the engine is kept running under no load or light load (load factor below 30%), unburnt fuel or carbon builds up in the exhaust system. As a result, the engine may get damaged or cause a fire.

Run the engine under enough load at regular intervals to remove unburnt fuel and carbon deposits.

- **Before doing the load operation, make sure there is nothing flammable around the engine.**
- **Do not put a load all at once on the engine, but gradually.**
- **If by any chance, spark rises out of the muffler outlet, DO NOT GET THE ENGINE UNLOADED, BUT INTERRUPT IT IMMEDIATELY.**

MAINTENANCE

WARNING

To avoid personal injury or death:

- **Be sure to conduct daily checks, periodic maintenance, refueling or cleaning on a level surface with the engine shut off and remove the key.**
- **Before allowing other people to use your engine, explain how to operate, and have them read this manual before operation.**
- **When cleaning any parts, do not use gasoline but use regular cleanser.**
- **Always use proper tools, that are in good condition. Make sure you understand how to use them, before performing any service work.**
- **When installing, be sure to tighten all bolts lest they should be loose. Tighten the bolts by the specified torque.**
- **Do not put any tools on the battery, or battery terminals may short out. Severe burns or fire could result. Detach the battery from the engine before maintenance.**
- **Do not touch muffler or exhaust pipes while they are hot; Severe burns could result.**

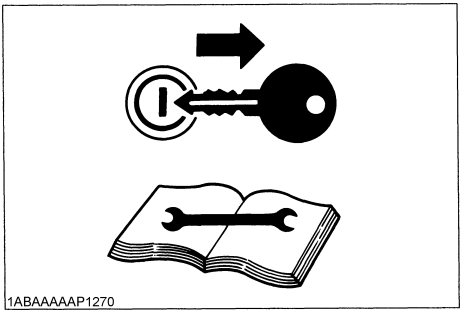

1ABAAAAAP1270

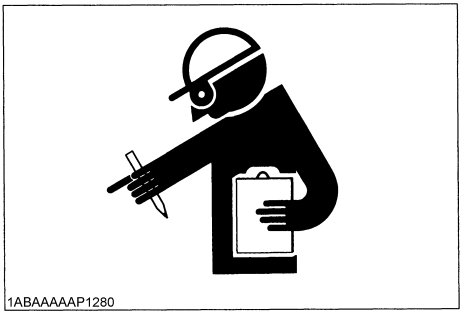

1ABAAAAAP1280

SERVICE INTERVALS

Observe the following for service and maintenance.

Interval	Item	Ref. page		
Every 50 hours	Check of fuel pipes and clamp bands	13		@
See NOTE	Change of engine oil (depending on the oil pan)	14,15	◎	
Every 100 hours	Cleaning of air cleaner element	19	*1	@
	Cleaning of fuel filter	14		
	Check of fan belt tightness	20		
	Draining water separator	-		
Every 200 hours	Replacement of oil filter cartridge (depending on the oil pan)	16	◎	
	Check of intake air line	-		@
Every 200 hours of operation or six months	Check of radiator hoses and clamp bands	18		
Every 400 hours	Replacement of fuel filter element	14		@
	Cleaning of water separator in fuel tank	-		
Every 500 hours	Cleaning of water jacket (radiator interior)	-		
	Replacement of fan belt	20		
Every year or every 6 cleanings of air cleaner element	Replacement of air cleaner element	19	*2	@
Every 800 hours	Check of valve clearance	-	*3	
Every 1500 hours	Check of fuel injection nozzle injection pressure	-	*3	@
Every 3000 hours	Check of injection pump	-	*3	@
	Check of turbo-charger (D902-T-E4)	20		
Every two years	Replacement of radiator hoses and clamp bands	18		
	Replacement of fuel pipes and clamps	13	*3	@
	Change of radiator coolant (L.L.C.)	16		
	Replacement of intake air line	-	*4	@

IMPORTANT :

- The jobs indicated by ◎ must be done after the first 50 hours of operation.

*1 Air cleaner should be cleaned more often in dusty conditions than in normal conditions.

*2 After 6 times of cleaning.

*3 Consult your local KUBOTA Dealer for this service.

*4 Replace only if necessary.

- The items listed above (@ marked) are registered as emission related critical parts by KUBOTA in the U.S. EPA nonroad emission regulation. As the engine owner, you are responsible for the performance of the required maintenance on the engine according to the above instruction.
  Please see the Warranty Statement in detail.

NOTE :

- **Changing interval of Engine oil and oil filter cartridge.**

<table>
<tr><td colspan="2" rowspan="2"></td><td colspan="2">*Oil pan depth</td></tr>
<tr><td>*101 mm
(3.98 in.)</td><td>121 mm
(4.76 in.)</td></tr>
<tr><td rowspan="3">Z602-E4
D902-E4
D902-T-E4</td><td rowspan="2">Engine oil</td><td>50 Hrs (Initial)</td><td rowspan="3">-</td></tr>
<tr><td>100 Hrs</td></tr>
<tr><td>Oil filter cartridge</td><td>200 Hrs</td></tr>
<tr><td rowspan="3">Z482-E4
D722-E4</td><td rowspan="2">Engine oil</td><td colspan="2">50 Hrs (Initial)</td></tr>
<tr><td>75 Hrs</td><td>100 Hrs</td></tr>
<tr><td>Oil filter cartridge</td><td>150 Hrs</td><td>200 Hrs</td></tr>
<tr><td rowspan="3">D782-E4</td><td rowspan="2">Engine oil</td><td rowspan="3">-</td><td>50 Hrs (Initial)</td></tr>
<tr><td>100 Hrs</td></tr>
<tr><td>Oil filter cartridge</td><td>200 Hrs</td></tr>
</table>

* 101 mm (3.98 in.) oil pan depth is optional for Z482-E4 and D722-E4.

**Standard replacement interval

- American Petroleum Institute (API) classification: above CF-4 grade
- Ambient temperature: below 35°C (95°F)

NOTE :

Lubricating oil

With strict emission control regulations now in effect, the CF-4 and CG-4 engine oils have been developed for use with low sulfur fuels, for On-Highway vehicle engines. When a Non-Road engine runs on high sulfur fuel, it is advisable to use a "CF or better" classification engine oil with a high Total Base Number (a minimum TBN of 10 is recommended).

- **Lubricating oil recommended when a low-sulfur or high-sulfur fuel is employed.**

○ : Recommendable X : Not recommendable

Lubricating oil classification	**Fuel		Remarks
	Low-sulfur	High-sulfur	
CF	○	○	*TBN≧ 10
CF-4	○	X	
CG-4	○	X	
CH-4	○	X	
CI-4	○	X	

*TBN: Total Base Number

**Fuel

- Diesel Fuel Specification Type and Sulfur Content % (ppm) used, must be compliant with all applicable emission regulations for the area in which the engine is operated.
- Use of diesel fuel with sulfur content less than 0.10 % (1000 ppm) is strongly recommended.
- If high-sulfur fuel (sulfur content 0.50 % (5000 ppm) to 1.0 % (10000 ppm)) is used as a diesel fuel, change the engine oil and oil filter at shorter intervals. (approximately half).
- DO NOT USE Fuels that have sulfur content greater than 1.0 % (10000 ppm).
- Since KUBOTA diesel engines of less than 56 kW (75 hp) utilize EPA Tier 4 and Interim Tier 4 standards, the use of ultra low sulfur fuel is mandatory for these engines, when operated in US EPA regulated areas. Therefore, please use No.2-D S15 diesel fuel as an alternative to No.2-D, and use No.1-D S15 diesel fuel as an alternative to No.1-D for ambient temperatures below -10 °C (14 °F).
  No.1-D or No.2-D, S15 : Ultra Low Sulfur Diesel (ULSD) 15 ppm or 0.0015 wt.%
- If the engine is to be operated within the European Union on diesel or non-road gas-oil, a fuel with sulfur content not greater than 10 mg/kg (20 mg/kg at point of final distribution), a cetane number not less than 45 and a fatty acid methyl ester (FAME) content not greater than 7 % volume per volume (v/v) shall be used.

- Oil used in the engine should have API classification and Proper SAE Engine Oil according to the ambient temperatures as shown below:

Above 25℃ (77℉)	10W-30 or 10W-40 or 15W-40
-10 to 25℃ (14℉ to 77℉)	10W-30 or 10W-40 or 15W-40
Below -10℃ (14℉)	10W-30 or 10W-40

- Recommended API classification
  Refer to the following table for the suitable American Petroleum Institute (API) classification of engine oil according to the engine type (with internal EGR, external EGR or non-EGR) and the Fuel Type Used : (Ultra Low Sulfur or High Sulfur Fuels).

Fuel type	Engine oil classification (API classification)	
	Engines with non-EGR Engines with internal EGR	Engines with external EGR
High Sulfur Fuel [0.05 % (500 ppm) ≦ Sulfur Content < 0.50 % (5000 ppm)]	**CF** (If the "CF-4, CG-4, CH-4 or CI-4" engine oil is used with a high-sulfur fuel, change the engine oil at shorter intervals. (approximately half))	---
Ultra Low Sulfur Fuel [Sulfur Content < 0.0015 % (15 ppm)]	**CF, CF-4, CG-4, CH-4 or CI-4**	**CF or CI-4** (Class CF-4, CG-4 and CH-4 engine, oils cannot be used on EGR type engines.)

EGR: Exhaust Gas Re-circulation

ENGLISH

PERIODIC SERVICE

FUEL

Fuel is flammable and can be dangerous. You should handle fuel with care.

WARNING

To avoid personal injury or death:

- **Do not mix gasoline or alcohol with diesel fuel. This mixture can cause an explosion.**
- **Be careful not to spill fuel during refueling. If fuel should spill, wipe it off at once, or it may cause a fire.**
- **Do not fail to stop the engine before refueling. Keep the engine away from the fire.**
- **Be sure to stop the engine while refueling or bleeding and when cleaning or changing fuel filter or fuel pipes. Do not smoke when working around the battery or when refueling.**
- **Check the fuel systems at a well ventilated and wide place.**
- **When fuel and lubricant are spilled, refuel after letting the engine cool off.**
- **Always keep spilled fuel and lubricant away from engine.**

■Fuel level check and refueling

1. Check to see that the fuel level is above the lower limit of the fuel level gauge.
2. If the fuel is too low, add fuel to the upper limit. Do not overfill.

Flash Point, ℃ (℉)	Water and Sediment, volume %	Carbon Residue on, 10 percent Residuum, %	Ash, weight %
Min	Max	Max	Max
52 (125)	0.05	0.35	0.01

Distillation Temperatures, ℃ (℉) 90% Point		Viscosity Kinematic cSt or mm^2/s at 40℃		Viscosity Saybolt, SUS at 37.8℃ (100℉)	
Min	Max	Min	Max	Min	Max
282 (540)	338 (640)	1.9	4.1	32.6	40.1

Sulfur, weight %	Copper Strip Corrosion	Cetane Number
Max	Max	Min
0.50	No. 3	40

- Cetane Rating : The minimum recommended Fuel Cetane Rating is 45. A cetane rating greater than 50 is preferred, especially for ambient temperatures below -20℃ (-4℉) or elevations above 1500 m (5000 ft).
- Diesel Fuel Specification Type and Sulfur Content % (ppm) used, must be compliant with all applicable emission regulations for the area in which the engine is operated.
- Use of diesel fuel with sulfur content less than 0.10 % (1000 ppm) is strongly recommended.
- If high-sulfur fuel (sulfur content 0.50 % (5000 ppm) to 1.0 % (10000 ppm)) is used as a diesel fuel, change the engine oil and oil filter at shorter intervals. (approximately half).
- DO NOT USE Fuels that have sulfur content greater than 1.0 % (10000 ppm).
- Diesel fuels specified to EN 590 or ASTM D975 are recommended.
- No.2-D is a distillate fuel of lower volatility for engines in industrial and heavy mobile service. (SAE J313 JUN87)
- Since KUBOTA diesel engines of less than 56 kW (75 hp) utilize EPA Tier 4 and Interim Tier 4 standards, the use of ultra low sulfur fuel is mandatory for these engines, when operated in US EPA regulated areas. Therefore, please use No.2-D S15 diesel fuel as an alternative to No.2-D, and use No.1-D S15 diesel fuel as an alternative to No.1-D for ambient temperatures below -10℃ (14℉).
  1) SAE : Society of Automotive Engineers
  2) EN : European Norm
  3) ASTM : American Society of Testing and Materials
  4) US EPA : United States Environmental Protection Agency
  5) No.1-D or No.2-D, S15 : Ultra Low Sulfur Diesel (ULSD) 15 ppm or 0.0015 wt.%

IMPORTANT :
- Be sure to use a strainer when filling the fuel tank, or dirt or sand in the fuel may cause trouble in the fuel injection pump.
- For fuel, always use diesel fuel. You are required not to use alternative fuel, because its quality is unknown or it may be inferior in quality. Kerosene, which is very low in cetane rating, adversely affects the engine. Diesel fuel differs in grades depending on the temperature.
- Be careful not to let the fuel tank become empty, or air can enter the fuel system, necessitating bleeding before next engine start.

■Air bleeding the fuel system

WARNING

To avoid personal injury or death:
- **Do not bleed a hot engine as this could cause fuel to spill onto a hot exhaust manifold creating a danger of fire.**

Air bleeding of the fuel system is required if;
- after the fuel filter and pipes have been detached and refitted;
- after the fuel tank has become empty; or
- before the engine is to be used after a long storage.

[PROCEDURE]
1. Fill the fuel tank to the fullest extent. Open the fuel filter lever.
2. Loosen air vent plug of the fuel filter a few turns.
3. Screw back the plug when bubbles do not come up any more.
4. Open the air vent plug on top of the fuel injection pump.
5. Retighten the plug when bubbles do not come up any more.

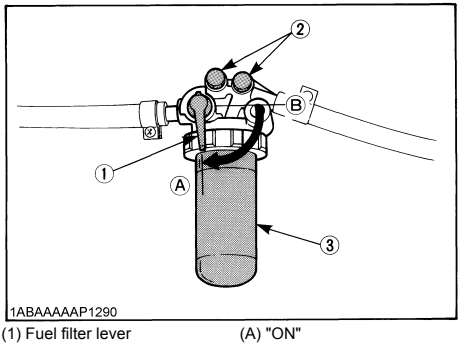

1ABAAAAAP1290

(1) Fuel filter lever
(2) Air vent plug
(3) Fuel filter pot
(A) "ON"
(B) "OFF"

■Checking the fuel pipes

WARNING

To avoid personal injury or death:
- **Check or replace the fuel pipes after stopping the engine. Broken fuel pipes can cause fires.**

Check the fuel pipes every 50 hours of operation. When if;
1. If the clamp band is loose, apply oil to the screw of the band, and tighten the band securely.
2. If the fuel pipes, made of rubber, become worn out, replace them and clamp bands every 2 years.
3. If the fuel pipes and clamp bands are found worn or damaged before 2 years' pass, replace or repair them at once.
4. After replacement of the pipes and bands, air-bleed the fuel system.

IMPORTANT :
- When the fuel pipes are not installed, plug them at both ends with clean cloth or paper to prevent dirt from entering. Dirt in the pipes can cause fuel injection pump malfunction.

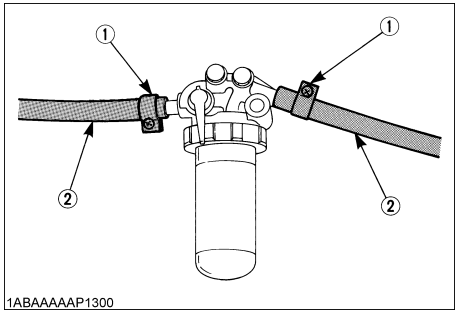

1ABAAAAAP1300

(1) Clamp band
(2) Fuel pipe

■Cleaning the fuel filter pot

Every 100 hours of operation, clean the fuel filter in a clean place to prevent dust intrusion.

1. Close the fuel filter lever.

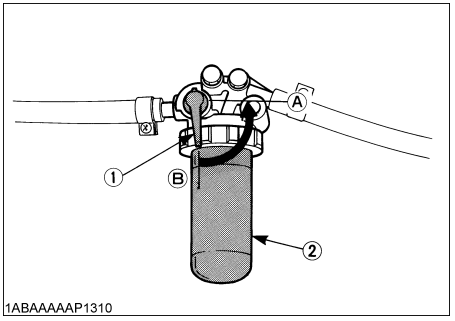

1ABAAAAAP1310

(1) Fuel filter lever
(2) Fuel filter pot
(A) "OFF"
(B) "ON"

2. Remove the top cap, and rinse the inside with diesel fuel.
3. Take out the element, and rinse it with diesel fuel.
4. After cleaning, reinstall the fuel filter, keeping out of dust and dirt.
5. Air-bleed the injection pump.

IMPORTANT :

- Entrance of dust and dirt can cause a malfunction of the fuel injection pump and the injection nozzle. Wash the fuel filter cup periodically.

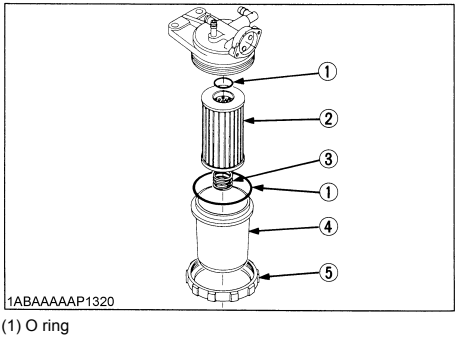

1ABAAAAAP1320

(1) O ring
(2) Filter element
(3) Spring
(4) Filter bowl
(5) Screw ring

ENGINE OIL

⚠ WARNING

To avoid personal injury or death:

- **Be sure to stop the engine before checking and changing the engine oil and the oil filter cartridge.**
- **Do not touch muffler or exhaust pipes while they are hot; Severe burns could result. Always stop the engine and allow it to cool before conducting inspections, maintenance, or for a cleaning procedure.**
- **Contact with engine oil can damage your skin. Put on gloves when using engine oil. If you come in contact with engine oil, wash it off immediately.**

NOTE :

- Be sure to inspect the engine, locating it on a horizontal place. If placed on gradients accurately, oil quantity may not be measured.
- Be sure to keep the oil level between upper and lower limits of the oil gauge. Too much oil may cause a drop in output or excessive blow-by gas. On the closed breather type engine in which mist is sucked through port, too much oil may cause oil hammer. While too little oil, may seize the engine's rotating and sliding parts. (The closed breather is an option.)

■Checking level and adding engine oil

1. Check the engine oil level before starting or more than 5 minutes after stopping the engine.
2. Remove the oil level gauge, wipe it clean and reinstall it.
3. Take the oil level gauge out again, and check the oil level.

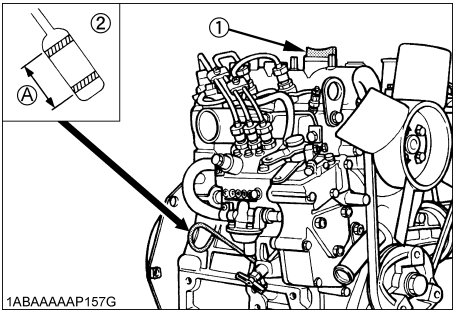

1ABAAAAAP157G

(1) Oil filler plug
(2) Oil level gauge
[Lower end of oil level gauge]
(A):Engine oil level within this range is proper.

4. If the oil level is too low, remove the oil filler plug, and add new oil to the prescribed level.
5. After adding oil, wait more than 5 minutes and check the oil level again. It takes same time for the oil to come down to the oil pan.

Engine oil quantity

Models	Oil pan depth	
	*101 mm (3.98 in.)	121 mm (4.76 in.)
Z482-E4	2.1 L (0.55 U.S.gals.)	2.5 L (0.66 U.S.gals.)
D722-E4	3.2 L (0.84 U.S.gals.)	3.8 L (1.0 U.S.gals.)
D782-E4	-	3.6 L (0.95 U.S.gals.)
Z602-E4	2.5 L (0.66 U.S.gals.)	-
D902-E4 D902-T-E4	3.7 L (0.98 U.S.gals.)	-

*101 mm (3.98 in.) oil pan depth is optional.

Oil quantities shown are for standard oil pans.

IMPORTANT :
- Engine oil should be MIL-L-2104C or have properties of API classification CF or higher.
  Change the type of engine oil according to the ambient temperature.

Above 25°C (77°F)	10W-30 or 10W-40 or 15W-40
-10°C to 25°C (14°F to 77°F)	10W-30 or 10W-40 or 15W-40
Below -10°C (14°F)	10W-30 or 10W-40

- When using oil different from the previous one, be sure to drain all the previous oil before adding the new engine oil.
- Use of the following oil not only disallows the engine from performing well in low temperatures until it warms up sufficiently but may also lead to excessive engine wear or engine seizure.
  - Oil with a viscosity higher than 10W-30
  - Oil not recommended by KUBOTA

■Changing engine oil

WARNING

To avoid personal injury or death:
- **Be sure to stop the engine before draining engine oil.**
- **When draining engine oil, place some container underneath the engine and dispose it according to local regulations.**
- **Do not drain oil after running the engine. Allow engine to cool down sufficiently.**

1. Change oil after the initial 50 hours of operation and every 100 hours thereafter.
2. Remove the drain plug at the bottom of the engine, and drain all the old oil. Drain oil easier and completely while the engine is hot.

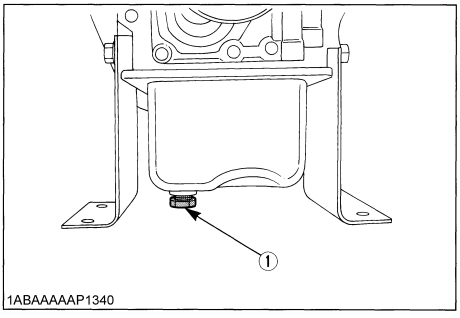

(1) Oil drain plug

3. Add new engine oil up to the upper limit of the oil level gauge.

■Replacing the oil filter cartridge

WARNING

To avoid personal injury or death:

- **Be sure to stop the engine before changing the oil filter cartridge.**
- **Allow engine to cool down sufficiently, oil can be hot and cause burns.**

1. Replace the oil filter cartridge after the initial 50 hours of operation and every 200 hours thereafter.
2. Remove the old oil filter cartridge with a filter wrench.
3. Apply a film of oil to the gasket for the new cartridge.
4. Screw in the cartridge by hand. When the gasket contacts the seal surface, tighten the cartridge enough by hand. Because, if you tighten the cartridge with wrench, it will be tightened too much.

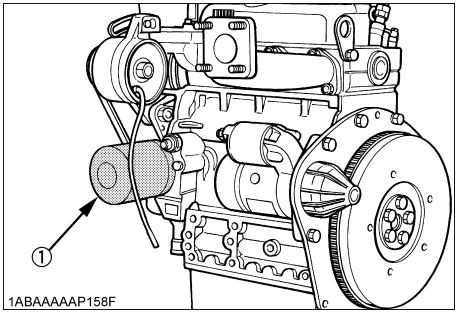

(1) Oil filter cartridge
Remove with a filter wrench
(Tighten with your hand)

5. After the new cartridge has been replaced, the engine oil level normally decreases a little. Thus, run the engine for a while and check oil leaks through the seal before checking the engine oil level. Add oil if necessary.

NOTE :

- Wipe off any oil sticking to the machine completely.

RADIATOR

Coolant will last for one day's work if filled all the way up before operation start. Make it a rule to check the coolant level before every operation.

WARNING

To avoid personal injury or death:

- **Do not stop the engine suddenly, stop it after about 5 minutes of unloaded idling.**
- **Work only after letting the engine and radiator cool off completely (more than 30 minutes after it has been stopped).**
- **Do not remove the radiator cap while coolant is hot. When cool to the touch, rotate cap to the first stop to allow excess pressure to escape. Then remove cap completely.**
  If overheats should occur, steam may gush out from the radiator or recovery tank; Severe burns could result.

■Checking coolant level, adding coolant

1. Remove the radiator cap, after the engine has completely cooled, and check to see that coolant reaches the supply port.

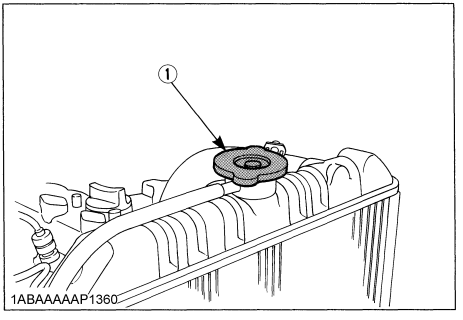

(1) Radiator pressure cap

2. If the radiator is provided with a recovery tank, check the coolant level of the recovery tank. When it is between the "FULL" and "LOW" marks, the coolant will last for one day's work.

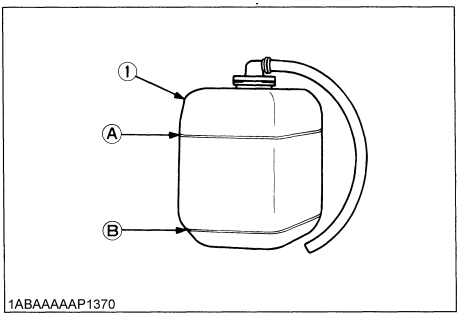

(1) Recovery tank (A) "FULL" (B) "LOW"

3. When the coolant level drops due to evaporation, add water only up to the full level.
4. Check to see that two drain cocks; one is at the crankcase side and the other is at the lower part of the radiator as figures below.

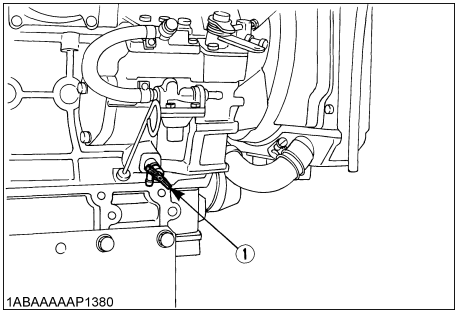

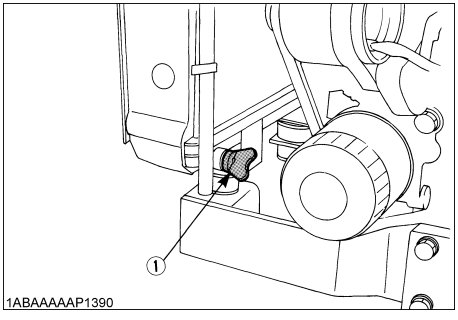

(1) Coolant drain cock

IMPORTANT :
- If the radiator cap has to be removed, follow the caution and securely retighten the cap.
- If coolant should be leak, consult your local KUBOTA dealer.
- Make sure that muddy or sea water does not enter the radiator.
- Use clean, fresh water and 50% anti-freeze to fill the recovery tank.
- Do not refill recovery tank with coolant over the "FULL" level mark.
- Be sure to close the radiator cap securely. If the cap is loose or improperly closed, coolant may leak out and decrease quickly.

■Changing coolant

1. To drain coolant, always open both drain cocks and simultaneously open the radiator cap as well. With the radiator cap kept closed, a complete drain of water is impossible.
2. Remove the overflow pipe of the radiator pressure cap to drain the recovery tank.
3. Prescribed coolant volume (U.S.gallons)

Models	Quantity
Z482-E4, Z602-E4	2.8 L (0.74 U.S.gals.)
D722-E4, D782-E4, D902-E4, D902-T-E4	3.1 L (0.82 U.S.gals.)

NOTE :
- Coolant quantities shown are for standard radiators.

4. An improperly tightened radiator cap or a gap between the cap and the seat quickens loss of coolant.
5. Coolant (Radiator cleaner and anti-freeze)

Season	Coolant
All seasons	Pure water and anti-freeze (See "Anti-freeze" in "RADIATOR" section.)

■Checking radiator hoses and clamp bands

WARNING

To avoid personal injury or death:

- **Be sure to check radiator hoses and clamp bands periodically. If radiator hose is damaged or coolant leaks, overheats or severe burns could occur.**

Check to see if radiator hoses are properly fixed every 200 hours of operation or 6 months, whichever comes first.

1. If hose clamps are loose or water leaks, tighten hose clamp securely.
2. Replace hoses and tighten hose clamps securely, if radiator hoses are swollen, hardened or cracked.

Replace hoses and hose clamps every 2 years or earlier, if checked and found that hoses are swollen, hardened or cracked.

■Precaution at overheating

The event that the coolant temperature is nearly or more than the boiling point is called **"OVERHEATING"**.

While running, make the following checks to see that all parts are working correctly. **If anything is unusual, inspect it, referring to the relevant description in. "MAINTENANCE" and "PERIODIC SERVICE" section.**

◆ **Coolant**

If the coolant temperature warning lamp lights up or if steam or coolant does not stop squirting from the radiator overflow pipe, turn off the load and **keep the engine idling (COOLING-DOWN) for at least 5 minutes** to let it cool down gradually. Then stop the engine and take the following inspection and servicing.

1. Check to see if the coolant runs short or if there is any coolant leak;
2. Check to see if there is any obstacle around the cooling air inlet or outlet;
3. Check to see if there is any dirt or dust between radiator fins and tube;
4. Check to see if the fan belt is too loose; and
5. Check to see if radiator water pipe is clogged.

■Cleaning radiator core (outside)

If dust is between the fin and tube, wash it away with running water.

IMPORTANT :

- Do not clean radiator with firm tools such as spatulas or screwdrivers. They may damage specified fin or tube. It can cause coolant leaks or decrease cooling performance.

■Cleaning the radiator (inside)

1. Clean up the coolant line inside in the following cases.
   - As per the SERVICE INTERVALS list.
   - When changing the coolant.
2. Use a **radiator cleaning agent**. This helps washaway scale deposits.

■Anti-freeze

WARNING

To avoid personal injury or death:

- **When using anti-freeze, put on some protection such as rubber gloves (Anti-freeze contains poison.).**
- **If should drink anti-freeze, throw up at once and take medical attention.**
- **When anti-freeze comes in contact with the skin or clothing, wash it off immediately.**
- **Do not mix different types of anti-freeze. The mixture can produce chemical reaction causing harmful substances.**
- **Anti-freeze is extremely flammable and explosive under certain conditions. Keep fire and children away from anti-freeze.**
- **When draining fluids from the engine, place some container underneath the engine body.**
- **Do not pour waste onto the grounds, down a drain, or into any water source.**
- **Also, observe the relevant environmental protection regulations when disposing of anti-freeze.**

Always use a 50/50 mix of long-life coolant and clean soft water in KUBOTA engines.

Contact KUBOTA concerning coolant for extreme conditions.

1. Long-life coolant (hereafter LLC) comes in several types. Use ethylene glycol (EG) type for this engine.
2. Before employing LLC-mixed cooling water, flush the radiator with fresh water. Repeat this procedure 2 or 3 times to clean up the radiator and engine block from inside.
3. Mixing the LLC
   Premix 50% LLC with 50% clean soft water. When mixing, stir it up well, and then fill into the radiator.
4. The procedure for the mixing of water and anti-freeze differs according to the make of the anti-freeze. Refer to SAE J1034 standard, more specifically also to SAE J814c.

Vol % Anti-freeze	Freezing Point		Boiling Point *	
	℃	℉	℃	℉
50	-37	-34	108	226

*At 1.013 x 10^5Pa (760 mmHg) pressure (atmospheric). A higher boiling point is obtained by using a radiator pressure cap which permits the development of pressure within the cooling system.

5. Adding the LLC
   (1) Add only water if the coolant level reduces in the cooling system by evaporation.
   (2) If there is a coolant leak, add the LLC of the same manufacturer and type in the same coolant percentage.

   *Never add any long-life coolant of different manufacturer. (Different brands may have different additive components, and the engine may fail to perform as specified.)
6. When the LLC is mixed, do not employ any radiator cleaning agent. The LLC contains anti-corrosive agent. If mixed with the cleaning agent, sludge may build up, adversely affecting the engine parts.
7. Kubota's genuine long-life coolant has a service life of 2 years. Be sure to change the coolant every 2 years.

NOTE :
- The above data represent industry standards that necessitate minimum glycol content in the concentrated anti-freeze.

AIR CLEANER

As the element of the air cleaner employed on this engine is a dry type, never apply oil to it.

1. Open the evacuator valve once a week under ordinary conditions-or daily when used in a dusty place-to get rid of large particles of dust and dirt.
2. Wipe the inside air cleaner clean with cloth or the like if it is dirty or wet.
3. Avoid touching the element except when cleaning.
4. When dry dust adheres to the element, blow compressed air from the inside turning the element. Pressure of compressed air must be under 205 kPa (2.1 kgf/cm^2, 30 psi).
5. Replace the element every year or every six cleanings.

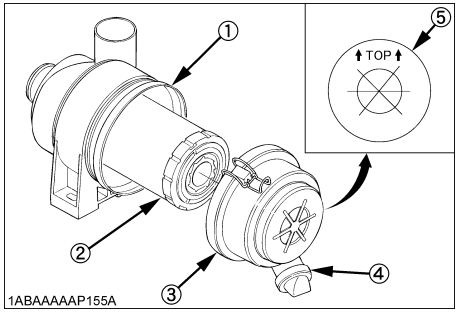

(1) Air cleaner body
(2) Element
(3) Cover
(4) Evacuator valve
(5) "TOP" mark

IMPORTANT :
- Make sure the hooking clip for cover for the element is tight enough. If it is loose, dust and dirt may be sucked, wearing down the cylinder liner and piston ring earlier and thereby resulting in poor power output.

ELECTRIC WIRING

WARNING

To avoid personal injury or death:

- **◆ Shorting of electric cable or wiring may cause a fire.**
  - **● Check to see if electric cables and wiring are swollen, hardened or cracked.**
  - **● Keep dust and water away from all power connections.**
    Loose wiring terminal parts, make bad connections. Be sure to repair them before starting the engine.

Damaged wiring reduces the capacity of electrical parts. Change or repair damaged wiring immediately.

1. Use automobile low voltage wiring cables for this wiring harness.
2. Use fuse and slow blow fuse as wiring protection.
3. Generally, available current of each fuse and size of wire in this drawing are recommendable value showed by Kubota, use suitable size fuses and wires for each machine to consideration to wiring setting and connection with another lines.
4. Install slow blow fuse near by battery, and install fuse box near by key switch.
5. Do not connect any parts which may cause induction current like motors to AC line.
6. Use heatproof cables, if room temperature around wire harness become over 75℃ (167℉).
7. Remove painting at connecting position before installation of each cable to any parts.

FAN BELT

■Adjusting Fan Belt Tension

WARNING

To avoid personal injury or death:

- **● Be sure to stop the engine and remove the key before checking the belt tension.**
- **● Be sure to reinstall the detached safety shield after maintenance or checking.**

Proper fan belt tension	A deflection of between 7 to 9 mm (0.28 to 0.35 in.) when the belt is pressed in the middle of the span.

1. Stop the engine and remove the key.
2. Apply moderate thumb pressure to belt between the pulleys.
3. If tension is incorrect, loosen the alternator mounting bolts and, using a lever placed between the alternator and the engine block, pull the alternator out until the deflection of the belt falls within acceptable limits.
4. Replace fan belt if it is damaged.

IMPORTANT :

- If belt is loosen or damaged and the fan is damaged, it could result in overheats or insufficient charging. Correct or replace belt.

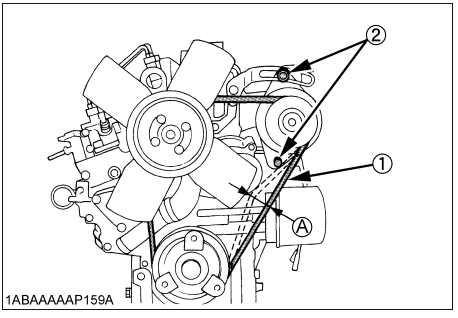

(1) Fan belt
(2) Bolt and nut
(A) 7 to 9 mm (0.28 to 0.35 in.) (under load of 10 kgf (22.1 lbs))

TURBO-CHARGER

Consult your local KUBOTA Dealer for this service.

CARRIAGE AND STORAGE

CARRIAGE

WARNING

To avoid personal injury or death:

- **Fix the engine securely not to fall during operation.**
- **Do not stand near or under the engine while carrying it.**
- **The engine is heavy. In handling it, be very alert not to get your hands and body caught in.**

1. Use carrier such as crane when carrying the engine, or hurt your waist and yourself. Support the engine securely with rope not to fall while carrying it.
2. When lifting the engine, put the hook securely to metal fittings attached to the engine. Use strong hook and fittings enough to hang the engine.

STORAGE

WARNING

To avoid personal injury or death:

- **Do not clean the machine with engine running.**
- **To avoid the danger of exhaust fume poisoning, do not operate the engine in a closed building without proper ventilation.**
- **When storing the engine just after running, let the engine cool off.**

Before storing the engine for more than a few months, remove any dirt on the machine, and:

1. Drain the coolant in the radiator. Open the cock at the bottom of the radiator, and remove the pressure cap to drain water completely. Leave the cock open. Hang a note written "No water" on the pressure cap. Since water may freeze when the temperature drops below 0°C (32°F), it is very important that no water is left in the machine.

NOTE :

- When using anti-freeze, it is not necessary to take step (1) above.

2. Remove dirty engine oil, fill with new oil and run the engine for about 5 minutes to let the oil penetrate to all the parts.
3. Check all the bolts and nuts, and tighten if necessary.
4. Remove the battery from the engine, adjust the electrolyte level, and recharge it. Store the battery in a dry and dark place.
5. When the engine is not used for a long period of time, run it for about 5 minutes under no load every 2 to 3 months to keep it free from rust. If the engine is stored without any running, moisture in the air may condense into dew over the sliding parts of the engine, resulting in rust there.
6. If you forget to run the engine for longer than 5 to 6 months, apply enough engine oil to the valve guide and valve stem seal and make sure the valve works smoothly before starting the engine.
7. Store the engine in a flat place and remove the key from engine.
8. Do not store the engine in a place where has flammable materials such as dry grass or straw.
9. When covering the engine for storage, let engine and muffler cool off completely.
10. Operate the engine after checking and repairing damaged wirings or pipes, and clearing flammable materials carried by mouse.

TROUBLESHOOTING

If the engine does not function properly, use the following chart to identify and correct the cause.

■ When it is difficult to start the engine

Cause	Countermeasures
Fuel is thick and doesn't flow.	* Check the fuel tank and fuel filter. * Remove water, dirt and other impurities. * As all fuel will be filtered by the filter, if there should be water or other foreign matters on the filter, clean the filter with kerosene.
Air or water mixed in fuel system	* If air is in the fuel filter or injection lines, the fuel pump will not work properly. * To attain proper fuel injection pressure, check carefully for loosened fuel line coupling, loose cap nut, etc. * Loosen air vent screws stop fuel filter and fuel injection pump to eliminate all the air in the fuel system.
Engine oil becomes thick in cold weather and engine cranks slow.	* Change grade of oil according to the weather (temperature.)
Battery is discharged and the engine will not crank.	* Charge battery. * In winter, always remove battery from machine, charge fully and keep indoors. Install in machine at time of use.

■ When output is insufficient

Cause	Countermeasures
Fuel is insufficient.	* Check fuel system.
Overheating of moving parts	* Check lubricating oil system. * Check to see if lubricating oil filter is working properly. * Filter element deposited with impurities would cause poor lubrication. Change element.
Air cleaner is dirty	* Clean the element every 100 hours of operation.
Injection pump wear	* Do not use poor quality fuel as it will cause wear of the pump. Only use No. 2-D diesel fuel. (See "FUEL" in "PERIODIC SERVICE" section.)

■ When engine suddenly stops

Cause	Countermeasures
Lack of fuel	* Check the fuel tank and refill the fuel, if necessary. * Also check the fuel system for air or leaks.
Bad nozzle	* If necessary, replace with a new nozzle.
Moving parts are overheated due to shortage of lubrication oil or improper lubrication.	* Check amount of engine oil with oil level gauge. * Check lubricating oil system. * At every 2 times of oil change, oil filter cartridge should be replaced.

■ When color of exhaust is especially bad

Cause	Countermeasures
Fuel is of extremely poor quality.	* Select good quality fuel. Use No. 2-D diesel fuel only.
Nozzle is bad.	* If necessary, replace with new nozzle.

■ When engine must be stopped immediately

Cause	Countermeasures
Color of exhaust suddenly turns dark.	* Check the fuel injection system, especially the fuel injection nozzle.
Bearing parts are overheated.	* Check the lubricating system.
Oil lamp lights up during operation.	* Check the lubricating system. * Check the function of the relieve valve in the lubricating system. * Check pressure switch. * Check filter base gasket.

NOTE :
- If the cause of trouble can not be found, contact your KUBOTA dealer.

■ **When engine overheats**

Cause	Countermeasures
Engine oil insufficient	* Check oil level. Replenish oil as required.
Fan belt broken or elongated	* Change belt or adjust belt tension.
Coolant insufficient	* Replenish coolant.
Excessive concentration of antifreeze	* Add water only or change to coolant with the specified mixing ratio.
Radiator net or radiator fin clogged with dust	* Clean net or fin carefully.
Inside of radiator or coolant flow route corroded	* Clean or replace radiator and parts.
Fan or radiator or radiator cap defective	* Replace defective parts.
Thermostat defective	* Check thermostat and replace if necessary.
Temperature gauge or sensor defective	* Check temperature with thermometer and replace if necessary.
Overload running	* Reduce load.
Head gasket defective or water leakage	* Replace parts.
Unsuitable fuel used	* Use the specified fuel.

SPECIFICATIONS

Model	Z482-E4	Z602-E4
Type	Vertical, water-cooled, 4-cycle diesel engine	
Number of cylinders	2	
Bore and stroke mm (in.)	67 x 68 (2.64 x 2.68)	72 x 73.6 (2.83 x 2.90)
Total displacement L (cu.in.)	0.479 (29.23)	0.599 (36.55)
Combustion chamber	Spherical Type (ETVCS)	
SAE NET Intermittent kW / rpm H.P. (SAEJ1349) (HP / rpm)	9.3 / 3600 (12.5 / 3600)	11.6 / 3600 (15.6 / 3600)
SAE NET Continuous kW / rpm H.P. (SAEJ1349) (HP / rpm)	8.1 / 3600 (10.8 / 3600)	10.1 / 3600 (13.5 / 3600)
Maximum bare speed rpm	3800	3850
Minimum bare idling speed rpm	1250 to 1350	1050 to 1150
Order of firing	1-2	
Direction of rotation	Counter-clockwise (viewed from flywheel side)	
Injection pump	Bosch MD Type mini pump	
Injection pressure	13.73 MPa, 1991 psi (140 kgf/cm^2)	
Injection timing (Before T.D.C.)	0.331 rad (19°)	0.331 rad (19°)
Compression ratio	23.5 : 1	24 : 1
Fuel	Diesel Fuel No.2-D	
Lubricant (API classification)	above CF	
Dimension mm (in.) (length x width x height)	351 x 389 x 520 (13.82 x 15.31 x 20.47)	385 x 421 x 544 (15.16 x 16.57 x 21.42)
Dry weight (BB Spec.) kg (lbs.)	53.1 (117.1)	57.0 (125.7)
Starting system	Cell starter (with glow plug)	
Starting motor	12 V, 0.8 kW	12 V, 1.0 kW
Charging generator	12 V, 150 W	12 V, 480 W
Recommended battery capacity (5Hr capacity)	12 V, 28 AH, equivalent	12 V, 36 AH, equivalent
EU engine family name	HKBXL.778KCB	HKBXL.898KCB
CO_2 Emission data g/kWh Non-road steady-state test cycle	1019.8	1047.4

NOTE :
- Specifications are subject to change without notice.
- The battery capacity is indicated in 5-hour ratio.
- This CO_2 measurement results from testing over a fixed test cycle under laboratory conditions a(n) (parent) engine representative of the engine type (engine family) and shall not imply or express any guarantee of the performance of a particular engine.

Model	D722-E4	D782-E4	D902-E4
Type	Vertical, water-cooled, 4-cycle diesel engine		
Number of cylinders	3		
Bore and stroke mm (in.)	67 x 68 (2.64 x 2.68)	67 x 73.6 (2.64 x 2.90)	72 x 73.6 (2.83 x 2.90)
Total displacement L (cu.in.)	0.719 (43.88)	0.778 (47.46)	0.898 (54.80)
Combustion chamber	Spherical Type (ETVCS)		
SAE NET Intermittent kW / rpm H.P. (SAEJ1349) (HP / rpm)	14.0 / 3600 (18.8 / 3600)	13.7 / 3200 (18.4 / 3200)	17.5 / 3600 (23.5 / 3600)
SAE NET Continuous kW / rpm H.P. (SAEJ1349) (HP / rpm)	12.2 / 3600 (16.3 / 3600)	11.9 / 3200 (16.0 / 3200)	15.2 / 3600 (20.4 / 3600)
Maximum bare speed rpm	3800	3450	3850
Minimum bare idling speed rpm	1250 to 1350	1000 to 1100	900 to 1000
Order of firing	1-2-3		
Direction of rotation	Counter-clockwise (viewed from flywheel side)		
Injection pump	Bosch MD Type mini pump		
Injection pressure	13.73 MPa, 1991 psi (140 kgf/cm²)		
Injection timing (Before T.D.C.)	0.35 rad (20°)	0.296 rad (17°)	0.331 rad (19°)
Compression ratio	23.5 : 1	24 : 1	
Fuel	Diesel Fuel No.2-D		
Lubricant (API classification)	above CF		
Dimension mm (in.) (length x width x height)	426 x 389 x 520 (16.77 x 15.31 x 20.47)		453 x 425 x 544 (17.83 x 16.73 x 21.42)
Dry weight (BB Spec.) kg (lbs.)	63.1 (139.1)	63.5 (140.0)	72.0 (158.7)
Starting system	Cell starter (with glow plug)		
Starting motor	12 V, 0.8 kW		12 V, 1.2 kW
Charging generator	12 V, 150 W		12 V, 480 W
Recommended battery capacity (5Hr capacity)	12 V, 36 AH, equivalent		12 V, 52 AH, equivalent
EU engine family name	HKBXL.778KCB	HKBXL.778KCB	HKBXL.898KCB
CO_2 Emission data g/kWh Non-road steady-state test cycle	1019.8	1019.8	1047.4

NOTE :
- Specifications are subject to change without notice.
- The battery capacity is indicated in 5-hour ratio.
- This CO_2 measurement results from testing over a fixed test cycle under laboratory conditions a(n) (parent) engine representative of the engine type (engine family) and shall not imply or express any guarantee of the performance of a particular engine.

Model	D902-T-E4
Type	Vertical, water-cooled, 4-cycle diesel engine
Number of cylinders	3
Bore and stroke mm (in.)	72 x 73.6 (2.83 x 2.90)
Total displacement L (cu.in.)	0.898 (54.80)
Combustion chamber	Spherical Type (ETVCS)
SAE NET Intermittent kW / rpm H.P. (SAEJ1349) (HP / rpm)	17.7 / 3200 (23.7 / 3200)
SAE NET Continuous kW / rpm H.P. (SAEJ1349) (HP / rpm)	16.1 / 3200 (21.6 / 3200)
Maximum bare speed rpm	3530
Minimum bare idling speed rpm	1300 to 1400
Order of firing	1-2-3
Direction of rotation	Counter-clockwise (viewed from flywheel side)
Injection pump	Bosch MD Type mini pump
Injection pressure	13.73 MPa, 1991 psi (140 kgf/cm^2)
Injection timing (Before T.D.C.)	0.323 rad (18.5°)
Compression ratio	23 : 1
Fuel	Diesel Fuel No.2-D
Lubricant (API classification)	above CF
Dimension mm (in.) (length x width x height)	453 x 425 x 544 (17.83 x 16.73 x 21.42)
Dry weight (BB Spec.) kg (lbs.)	75.0 (165.4)
Starting system	Cell starter (with glow plug)
Starting motor	12 V, 1.2 kW
Charging generator	12 V, 480 W
Recommended battery capacity (5Hr capacity)	12 V, 55 AH, equivalent
EU engine family name	LKBXL.898KAB
CO_2 Emission data g/kWh Non-road steady-state test cycle	921.2

NOTE :
- Specifications are subject to change without notice.
- The battery capacity is indicated in 5-hour ratio.
- This CO_2 measurement results from testing over a fixed test cycle under laboratory conditions a(n) (parent) engine representative of the engine type (engine family) and shall not imply or express any guarantee of the performance of a particular engine.

EU standard for Alternator (Energize to stop)

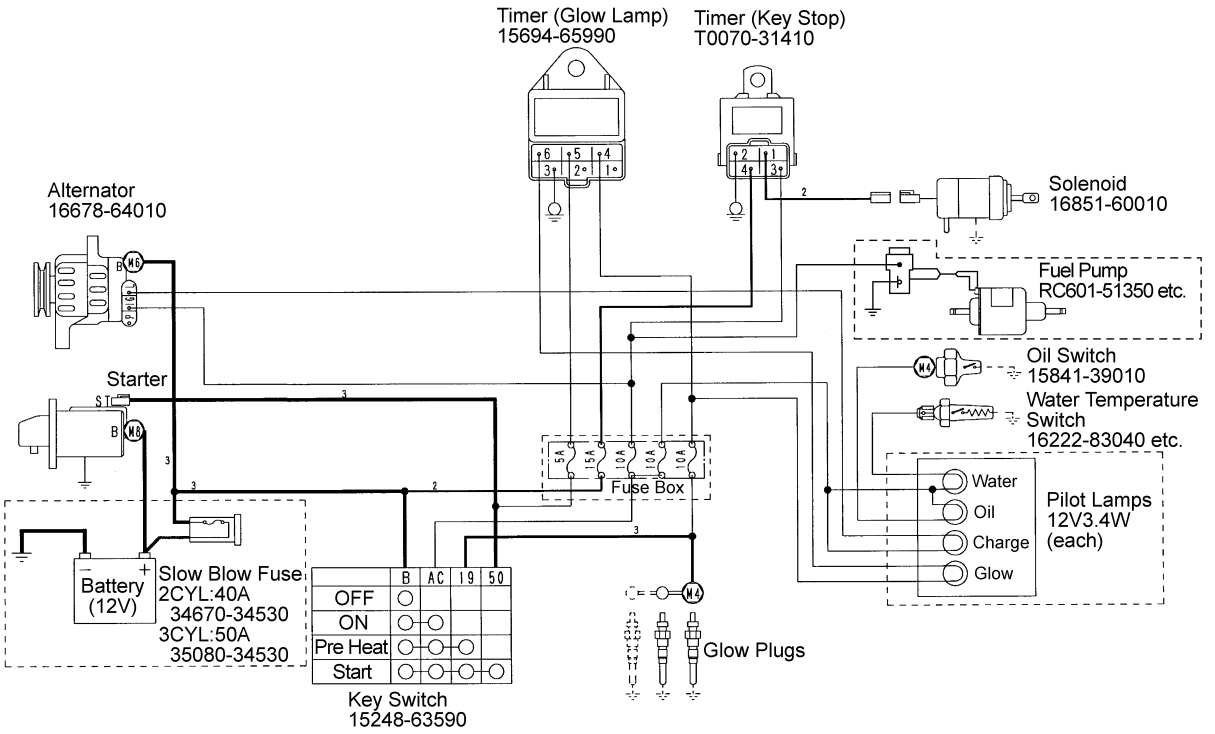

*The parts boxed in [ ] are reference, NOT equiped for standard engine spec.
*Use wire size 0.5 ~ 0.85 mm^2 with no mark.

1ABAAAAAP151F

KEA standard for Alternator (Energize to stop)

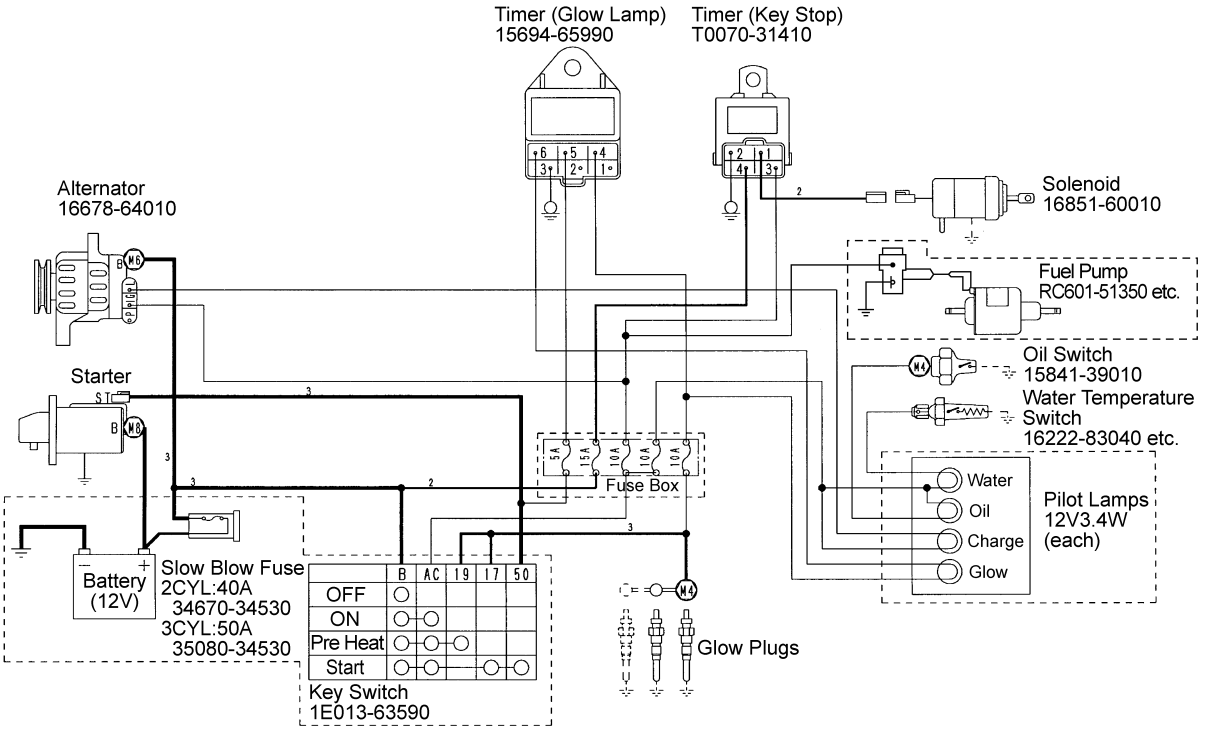

*The parts boxed in[ ]are reference, NOT equiped for standard engine spec.
*Use wire size 0.5 ~ 0.85 mm^2 with no mark.

1ABAAAAAP152F

EU standard for Dynamo (Energize to stop)

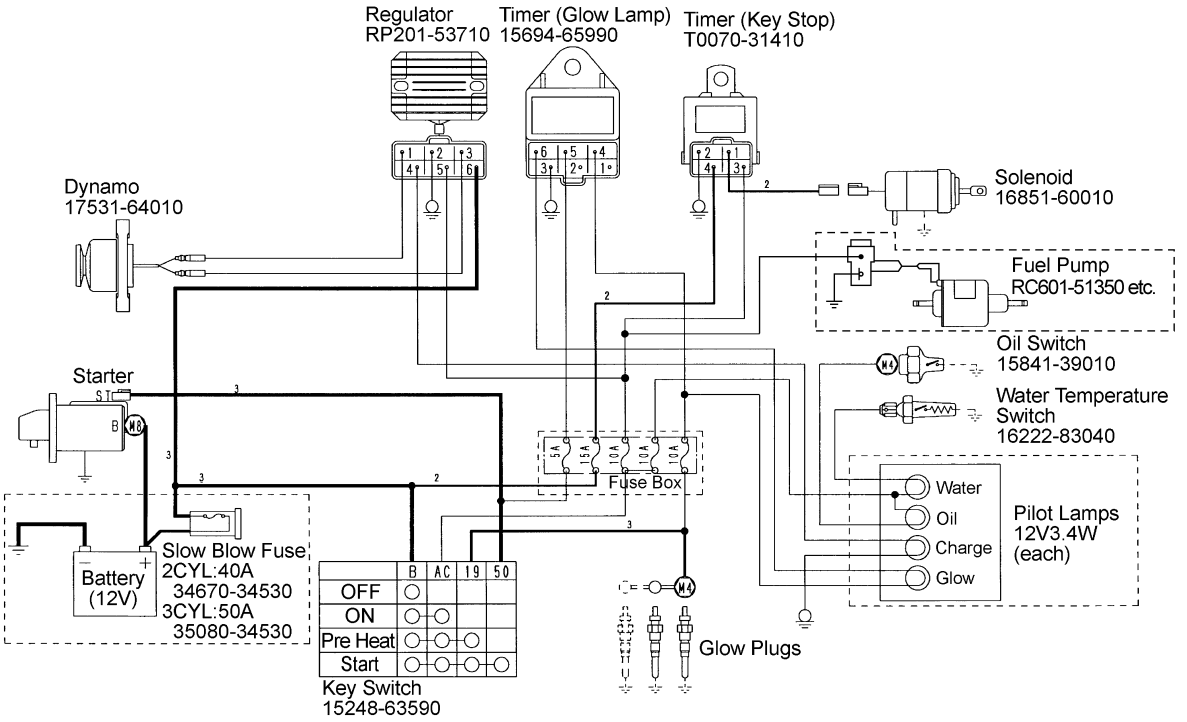

*The parts boxed in [ ] are reference, NOT equiped for standard engine spec.
*Use wire size 0.5 ~ 0.85 mm^2 with no mark.

1ABAAAAAP153F

ENGLISH

KEA standard for Dynamo (Energize to stop)

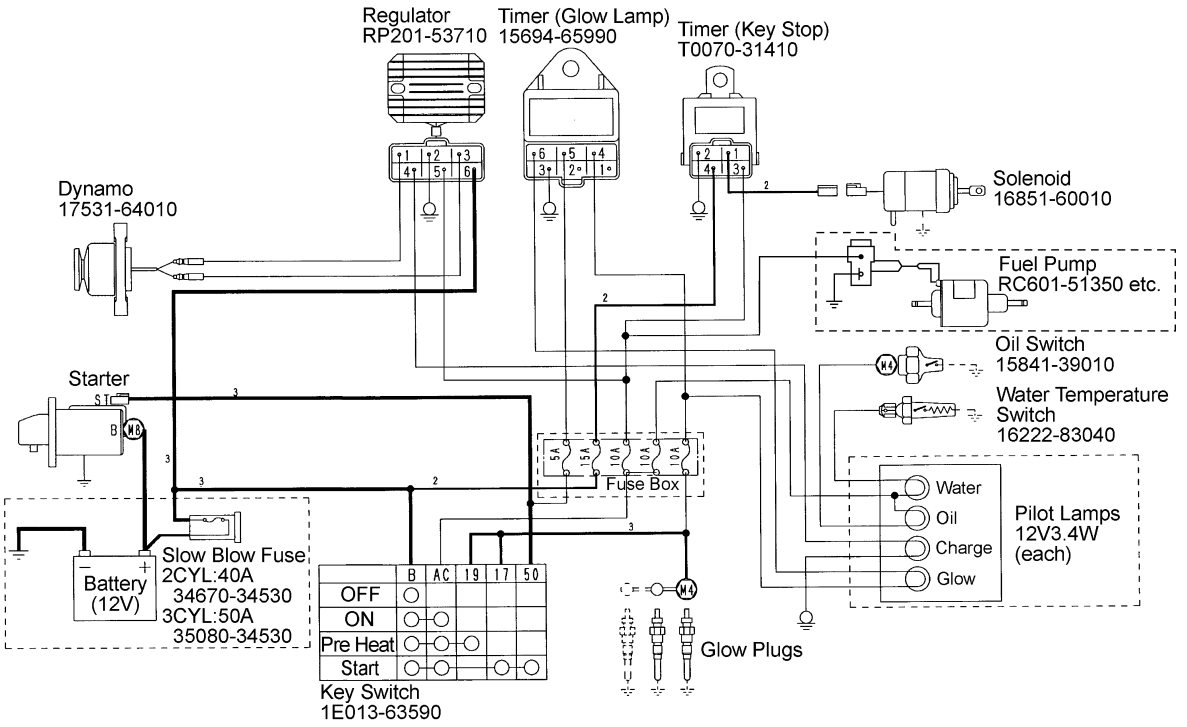

*The parts boxed in [ ] are reference, NOT equiped for standard engine spec.
*Use wire size 0.5 ~ 0.85 mm^2 with no mark.

1ABAAAAAP154F

10.4.2 Combustion engine (petrol)

10.5 Accessories documentation

10.5.1 Handrail guard on the platform

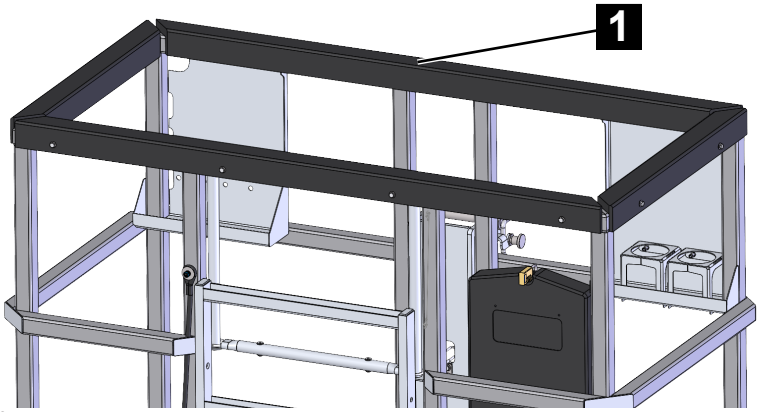

Fig. 220

To protect the handrail from damage, for example by a chainsaw, an optional all-round plastic guard (Fig.220/1) can be fitted.

10.5.2 TEUPEN operator protection system

In order to protect the operator in the platform, a “Teupen operator protection system” can be installed.

Description of available operating modes:

If the signal wire is tripped, all machine movements are stopped.

An acoustic signal sounds automatically and an LED warning light flashes until either the signal wire is re-inserted or the machine is shut off.

⚠ DANGER

Risk of crushing!

The person operating the machine can be caught and crushed in between the platform and other objects when operating the machine from the platform. This crushing can result in severe or even fatal injuries.

– When operating the control unit, never lean over the retainers of the TEUPEN operator protection system.
– Always operate the control unit from a position above the red signal wire between the system’s retainers.

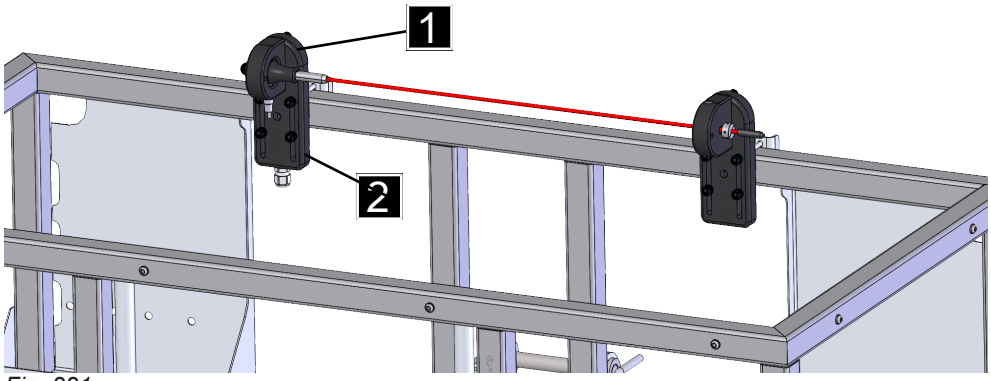

Fig. 221

If the TEUPEN operator protection system has been tripped, proceed as follows:

	If you are not trapped and can move to safety	If you are trapped and cannot move to safety
1.	Keep calm.	Keep calm.
2.	Free yourself from the restricted position.	Call for help.
3.	Insert the contact bolt (Fig.221/1) of the signal wire into the guide (Fig.221/2).	Have the second person on the ground rescue you.
4.	Continue operation and move out of the danger zone.	

10.5.3 Monitoring of the platform ladder

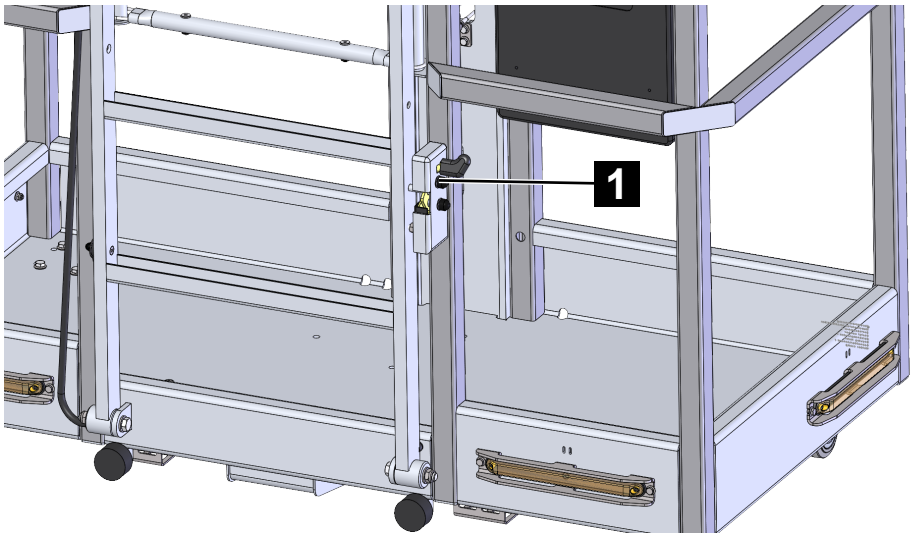

Fig. 222

To protect the platform ladder and platform from damage, a monitoring device (Fig.222/1) for the platform ladder position when folded can be installed as an option. When the platform ladder is extended, the boom functions are interrupted.

10.5.4 Flashing lights on the platform

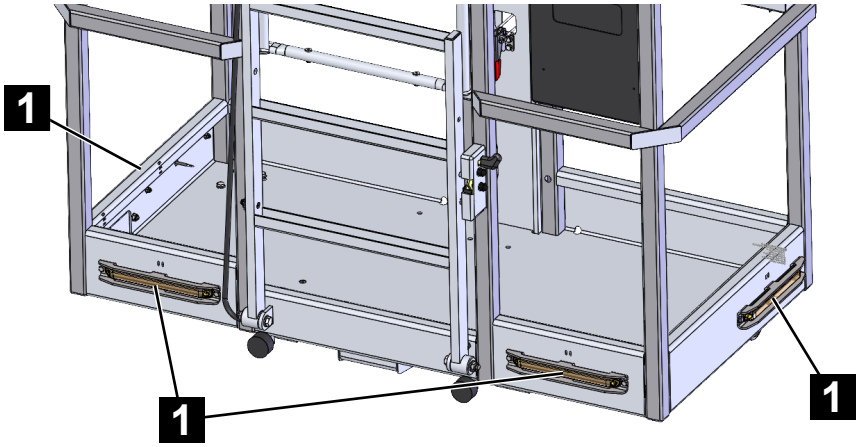

Fig. 223

Four flashing lights (Fig.223/1) can optionally be installed on the outside of the footboard to make the platform more visible. Operation via the display.

10.5.5 Strobe lights under the platform

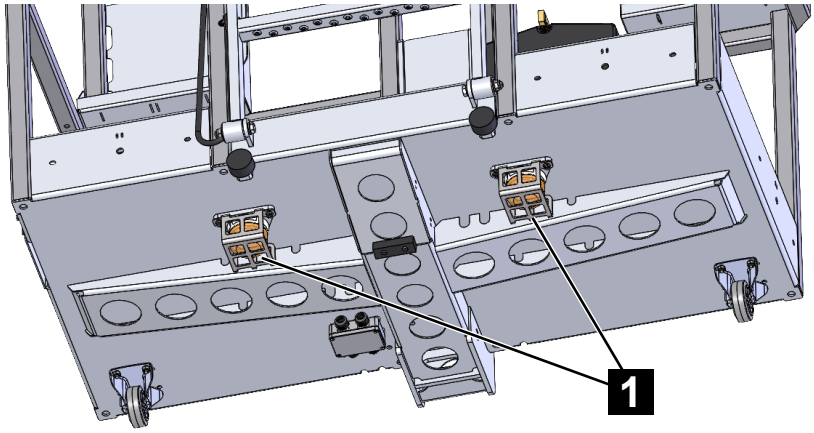

Fig. 224

Two strobe lights (Fig.224/1) can optionally be installed on the platform floor to make the platform more visible. Operation via the display.

10.5.6 Flashing lights on outriggers

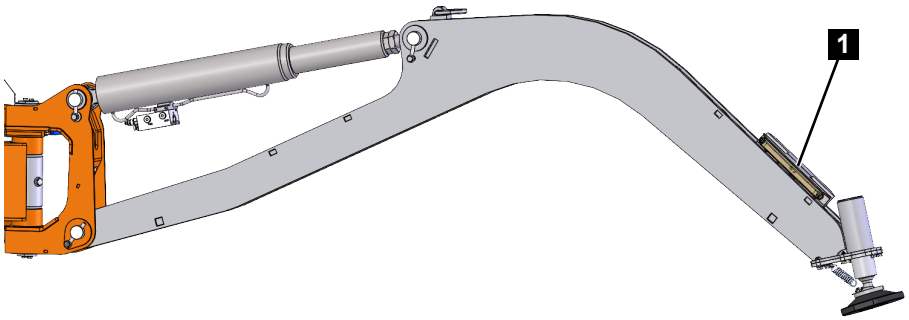

Fig. 225

Two flashing lights (Fig.225/1) can optionally be installed on each outrigger for increased visibility of the machine and outriggers. Operation via the display.

10.5.7 Flashing lights on the turntable

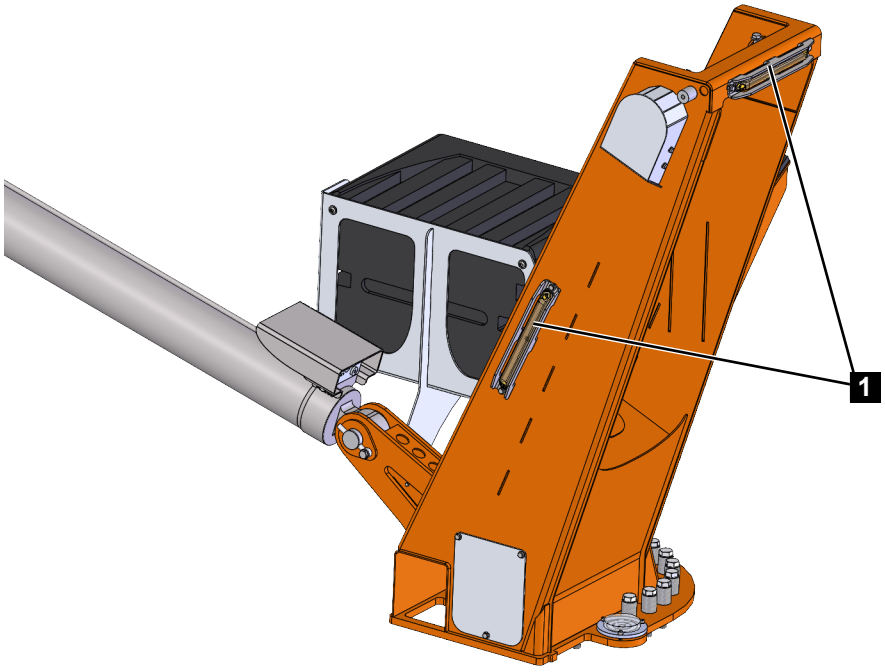

Fig. 226

Three flashing lights (Fig.226/1) can be optionally installed on the turntable for increased machine visibility.

10.5.8 GRP platform

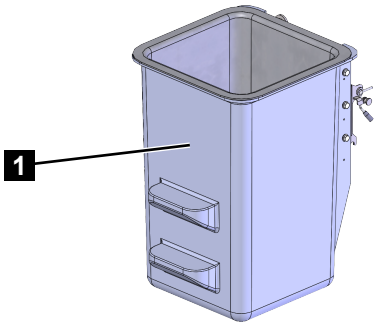

Fig. 227

As an alternative to the standard platform, a 1-man GRP platform (Fig.227/1) can be installed. Attention: The machine is not insulated when the GRP platform is used. The maximum platform load for the 1-person GRP platform is 160 kg.

The GRP platform cannot be combined with the following equipment:

- Flashing lights on the platform
- Strobe lights on the platform
- Monitoring of the platform ladder
- Handrail guard
- TOPS
- Spotlights on the platform